R-7585
Decorative Bollard Installation

Drop-In Concrete Insert

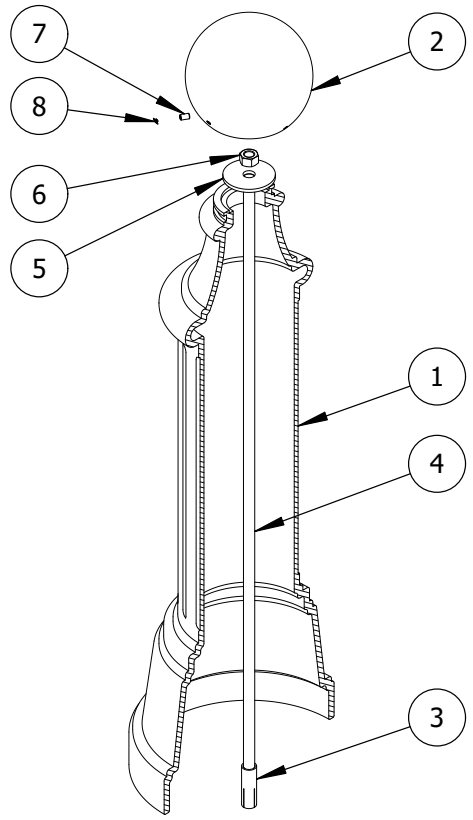

Parts List

#	PART	QTY
1	Bollard Base	1
2	Bollard Cap	1
3	Drop-In Concrete Insert 3/4"	1
4	Threaded Rod 3/4"	1
5	Washer 3/4"	1
6	Hex Nut 3/4"	1
7	Hexagon Socket Set Screw	3
8	Plastic Plug	3

Installation Equipment

Chalk	1" Masonry Drill Bit
Hammer	1-1/8" Socket Wrench
Vacuum	Hammer Drill or Rotary Hammer
3/16" Hex Key	Measuring Tape
Level	Broom/Pressure Washer
3/4" Insert Setting Tool (or equivalent)	

⚠ To protect the finish, keep bollards in packaging until exact moment of installation.

⚠ Handle with care to avoid scratching or damaging bollard surfaces as abrasions will lead to rust.

⚠ Once scratched, bollards cannot be repaired to original form without re-finishing the entire surface.

Before Installation

STEP 1: Always check for hazards such as water pipes, gas lines, and underground wiring before drilling.

STEP 2: Use a broom or pressure washer to clean the concrete surface prior to bollard installation.

STEP 3: Study the site plans to locate and mark the precise center point of each bollard. For secure installation, ensure there is a minimum radius* of solid concrete around each mark.

**Concrete insert manufacturers such as www.ucanfast.com recommend specific measurements for minimum radii.*

R-7585
Decorative Bollard Installation

Drop-In Concrete Insert

STEP 6

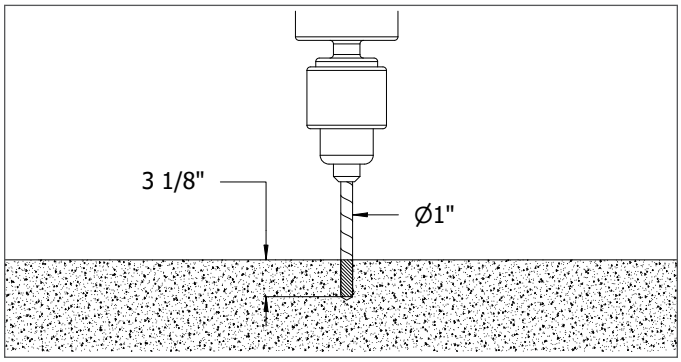

STEP 7

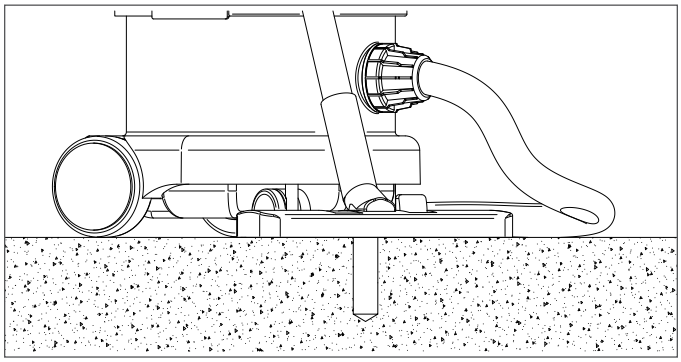

STEP 8

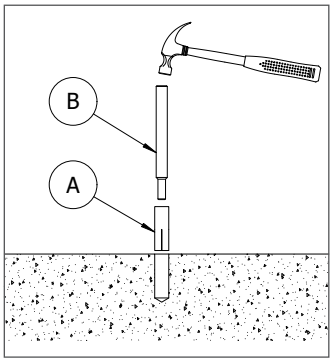

STEP 11

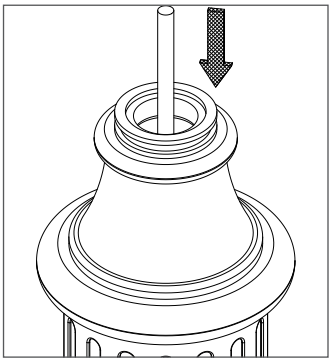

STEP 12

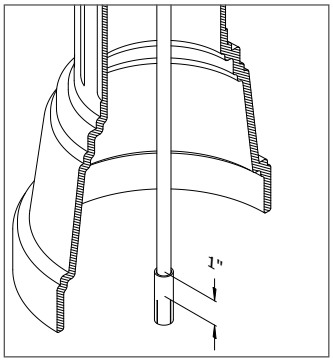

STEP 13

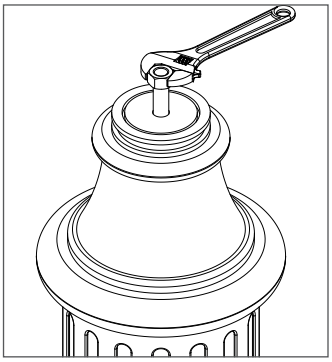

Drill the Hole

STEP 4: Tap a pilot divot hole in the center of each mark.

STEP 5: Set the depth control on the hammer drill (or rotary hammer) to 3-1/8". If depth control is not available, mark 3-1/8" on the masonry bit.

STEP 6: Drill a hole that has a 1" diameter and 3-1/8" depth. Drill on high speed, using the hammer function if available.

Secure the Bollard

STEP 7: Clear the hole of all debris and/or standing water using the vacuum.

STEP 8: Tap the drop-in insert **(A)** into the hole with the slotted end facing down, and drive it down until its top sits flush with the concrete surface. Insert a setting tool **(B)** into the threaded hole, then hammer down. This will cause the internal expansion plug to set the concrete insert in place. *Note: If a proper setting tool is not available, an equivalent flat-end punch can be used.*

STEP 9: Keep the bollard in its protective packaging. Carefully place the bollard base near the installation position. When ready to install, remove the protective packaging.

STEP 10: Set the bollard base upright and maneuver it so the center lines up with the threaded hole in the concrete insert.

STEP 11: Lower the threaded rod through the bollard base.

STEP 12: Continue to thread the rod into the concrete insert. Tighten** the threaded rod by hand until it is secure in the concrete insert.

STEP 13: Place the washer over the threaded rod so that it rests on top of the bollard. Apply the 3/4" hex nut to the threaded rod and tighten until the bollard is secure.

***The manufacturer recommends tightening the threaded rod to a depth of approximately 1" into the concrete insert.*

R-7585
Decorative Bollard Installation

Drop-In Concrete Insert

STEP 14

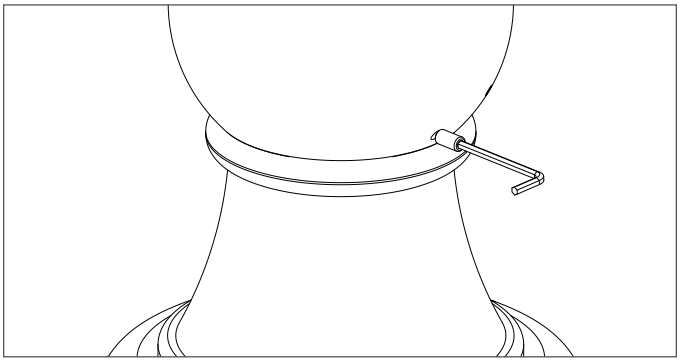

STEP 15

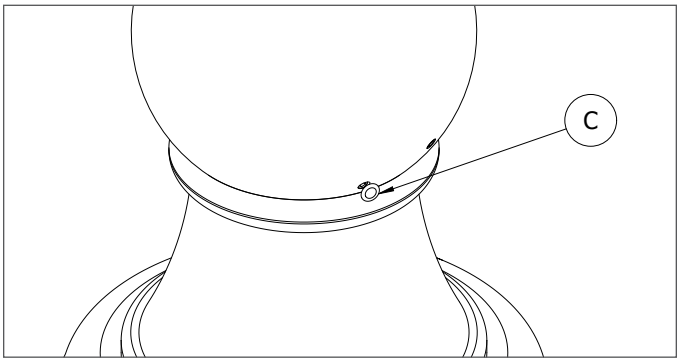

STEP 14: Remove bollard cap from its packaging. Place the cap on the top of the shaft of the bollard. Secure and align the cap to the bollard base with the three set screws. Tighten in equal amounts to ensure that the cap remains centered.

STEP 15: Place the plastic plugs **(C)** over the set screw heads.

Inspect the installation. Abrasions should be covered as soon as possible. For damage repair or other servicing needs, please contact Reliance Foundry's sales department.