Bollard R-7551

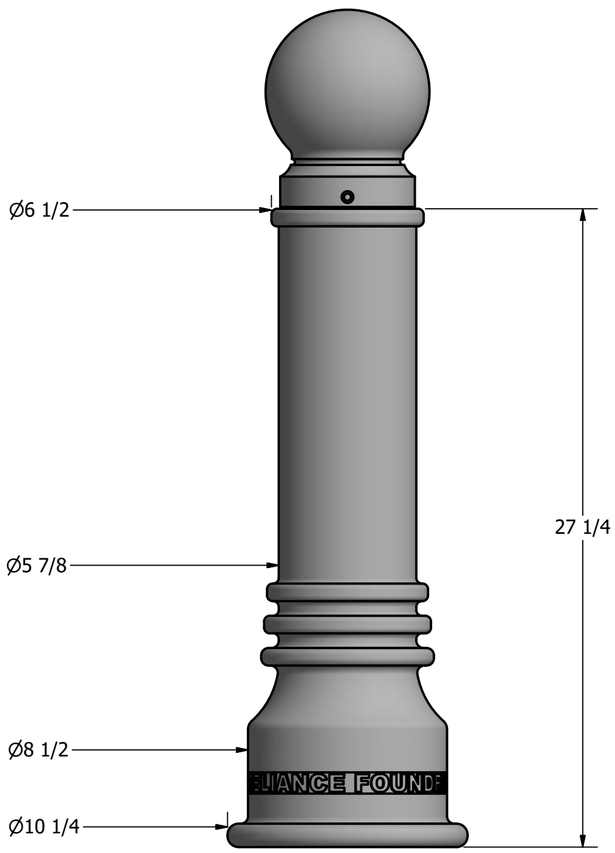

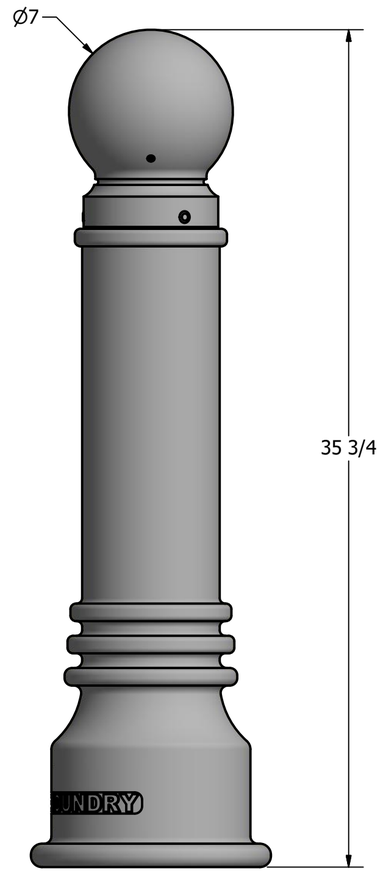

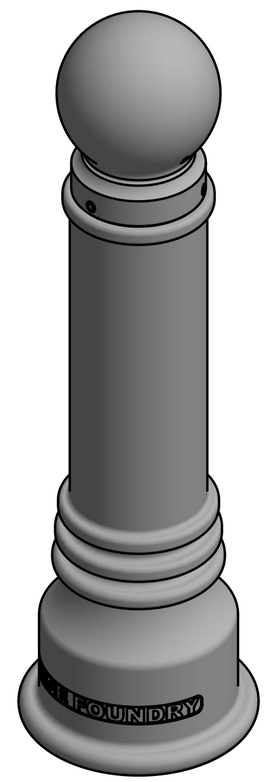

Installation Sample
with 5/16" Chain Accessories

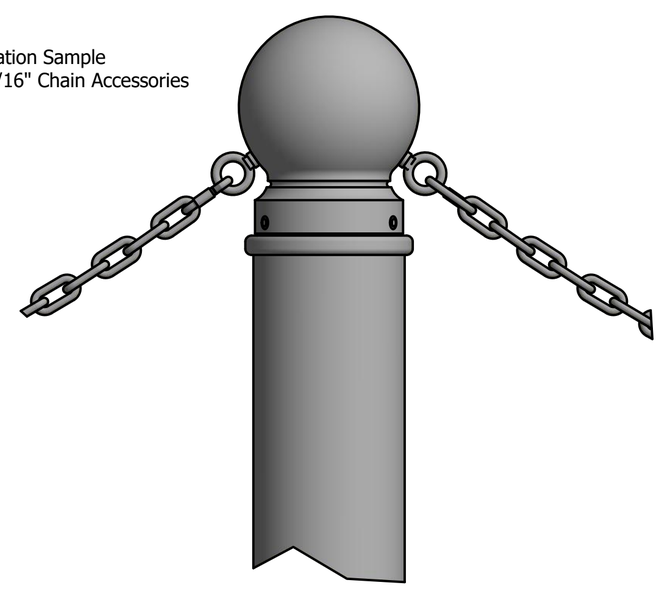

Bollard Chain Eye 3/8"
(Powder Coated)

Quick Link Connector 5/16"
(Powder Coated)

Bollard Chain 5/16"
(Powder Coated)

General Description:

The R-7551 Decorative Bollard is made from a versatile ductile iron, featuring a clean finish and spherical top casting. Bollard surfaces are protected by a durable powder coating, available in 6 standard colors, to prevent wear and corrosion. Use as fixed, stand-alone bollards or cover impact-resistant security posts. Removable mountings are available.

Specifications:

Height: 35 3/4"
Base Diameter: 10 1/4"
Weight: 78 lbs (Bollard Only)
Material: Ductile Iron
Max. Interior Security Post Size:
4 1/2" x 25" (Diameter x Height)

Finish Options:

⦿ Polyester Powdercoated

See Reliance Foundry's standard color options at:
www.reliance-foundry.com/bollard/colors-bollards

Installation Options:

- ○ Fixed - Anchor Casting in New Concrete (see sheet 2 of 12)
- ○ Fixed - Concrete Insert Anchor in Existing Concrete (see sheet 3 of 12)
- ○ Fixed - Adhesive Anchor in Existing Concrete (see sheet 4 of 12)
- ○ Fixed - Anchor Casting with Concrete Form (see sheet 5 of 12)
- ○ Post Cover - New Post in New Concrete (see sheet 6 of 12)
- ○ Post Cover - New Post in Existing Concrete (see sheet 7 of 12)
- ○ Post Cover - Existing Post with Adhesive Anchor (see sheet 8 of 12)
- ○ Post Cover - Existing Post with Concrete Anchor (see sheet 9 of 12)
- ○ Removable - Anchor Casting in New Concrete (see sheet 10 of 12)
- ○ Removable - Concrete Insert Anchor in Existing Concrete (see sheet 11 of 12)
- ○ Removable - Premium Retractable in New Concrete (see sheet 12 of 12)

For more information on bollard post installation, please visit:
www.reliance-foundry.com/bollard/installation-bollards

Care and Maintenance:

Reliance's line of bollards are finished with a long-lasting powder-coating. Proper care and maintenance are required. Regularly-performed inspections and routine cleaning will ensure that a bollard retains its aesthetic appeal and does not become damaged by the elements.

See Reliance Foundry's maintenance guide at:
www.reliance-foundry.com/bollard/maintenance-bollards

Optional Accessories:

- ○ Chain Eye
- ○ Quick link
- ○ Chain (5/16")
- ○ Padlock, Brass (1 3/4")
- ○ Padlock, Stainless Steel (2")

See Reliance Foundry's optional accessories at:
www.reliance-foundry.com/bollard/accessories-bollards

RELIANCE FOUNDRY
SINCE 1925
Unit 207, 6450 - 148 Street, Surrey, BC V3S 7G7, Canada
1-877-789-3245 info@reliance-foundry.com
www.reliance-foundry.com

TITLE
Bollard R-7551

SIZE		DWG NO	REV
C		R7551	C4

NOT TO SCALE | SHEET 1 OF 12

COPYRIGHT RESERVED THIS PLAN DRAWING AND DESIGN ARE, AND AT ALL TIMES REMAIN, THE EXCLUSIVE PROPERTY OF RELIANCE FOUNDRY CO. LTD.

Bollard R-7551

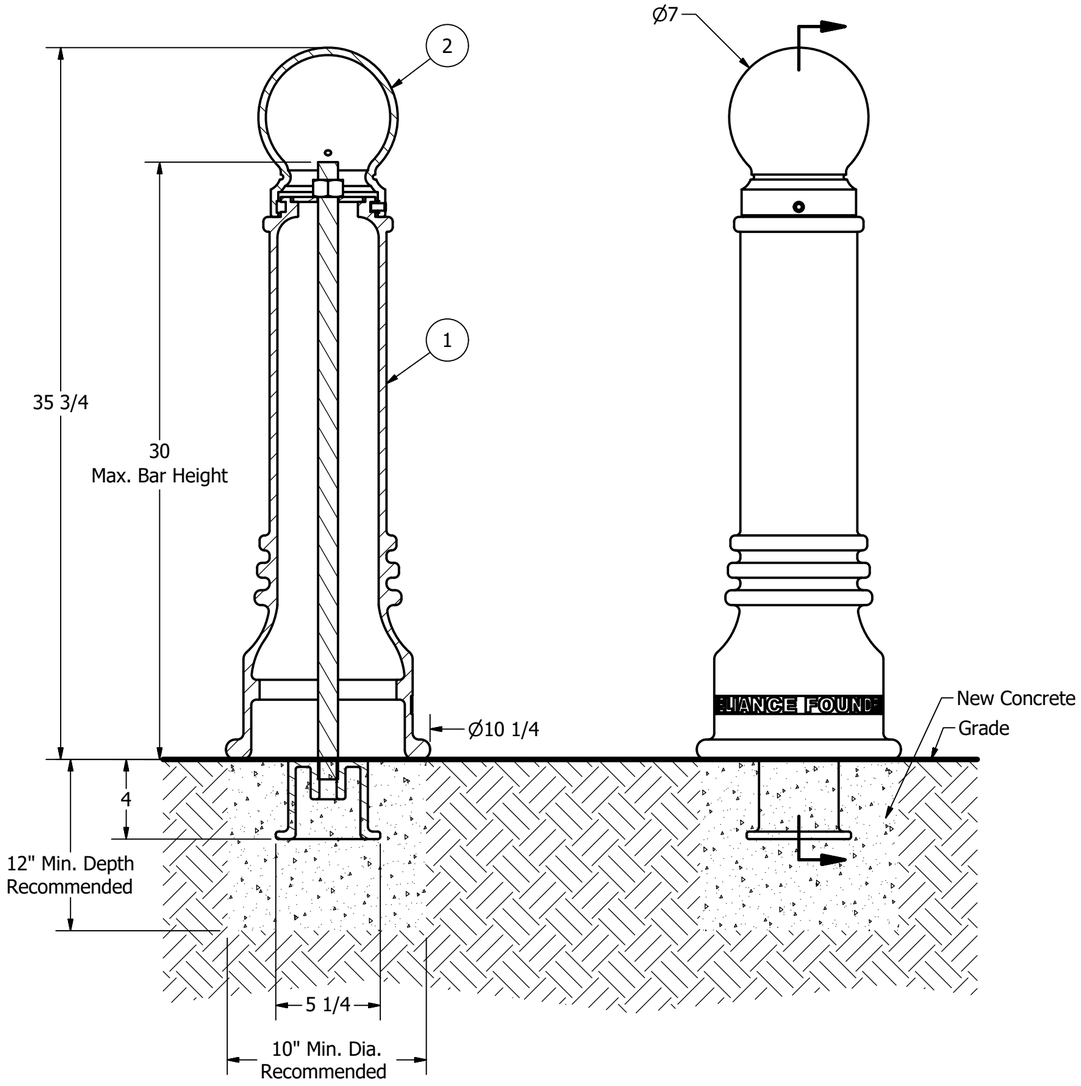

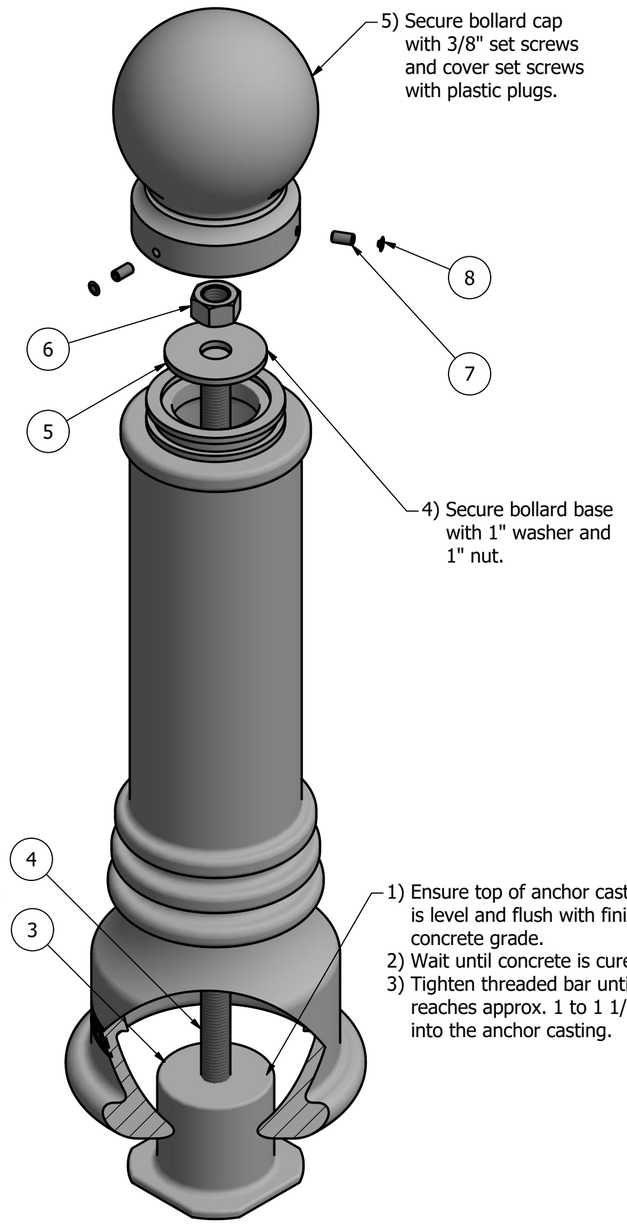

Notes:
1) Bollard post is provided as shown. Concrete, foundation and/or installation ordered separately or provided by others.
2) Minimum foundation sizes depend on local soil conditions, weather conditions, and engineering requirements.
3) Dimensions provided herein is for reference only. Please consult Reliance Foundry sales professionals if any dimension is critical to your particular installation.
4) Reliance Foundry reserves the right to amend design and specifications without prior notice for product improvement.

Tools needed:
1) Measuring tape
2) 1 1/2" wrench
3) 3/16" hex key

General Description:

The R-7551 Decorative Bollard is made from a versatile ductile iron, featuring a clean finish and spherical top casting. Bollard surfaces are protected by a durable powder coating, available in 6 standard colors, to prevent wear and corrosion. Use as fixed, stand-alone bollards or cover impact-resistant security posts. Removable mountings are available.

Specifications:

Height: 35 3/4"
Base Diameter: 10 1/4"
Weight: 78 lbs (Bollard Only)
Material: Ductile Iron
Max. Interior Security Post Size:
4 1/2" x 25" (Diameter x Height)

Finish Options:

⦿ Polyester Powdercoated

See Reliance Foundry's standard color options at:
www.reliance-foundry.com/bollard/colors-bollards

Installation Options:

⦿ Fixed - Anchor Casting in New Concrete (see sheet 2 of 12)
○ Fixed - Concrete Insert Anchor in Existing Concrete (see sheet 3 of 12)
○ Fixed - Adhesive Anchor in Existing Concrete (see sheet 4 of 12)
○ Fixed - Anchor Casting with Concrete Form (see sheet 5 of 12)
○ Post Cover - New Post in New Concrete (see sheet 6 of 12)
○ Post Cover - New Post in Existing Concrete (see sheet 7 of 12)
○ Post Cover - Existing Post with Adhesive Anchor (see sheet 8 of 12)
○ Post Cover - Existing Post with Concrete Anchor (see sheet 9 of 12)
○ Removable - Anchor Casting in New Concrete (see sheet 10 of 12)
○ Removable - Concrete Insert Anchor in Existing Concrete (see sheet 11 of 12)
○ Removable - Premium Retractable in New Concrete (see sheet 12 of 12)

For more information on bollard post installation, please visit:
www.reliance-foundry.com/bollard/installation-bollards

Care and Maintenance:

Reliance's line of bollards are finished with a long-lasting powder-coating. Proper care and maintenance are required. Regularly-performed inspections and routine cleaning will ensure that a bollard retains its aesthetic appeal and does not become damaged by the elements.

See Reliance Foundry's maintenance guide at:
www.reliance-foundry.com/bollard/maintenance-bollards

PARTS LIST

ITEM	QTY	PART NUMBER	DESCRIPTION	MATERIAL	WEIGHT
1	1	R7551B	R7551 Base	Ductile Iron Powder Coated	63 lbs
2	1	R7551C	R7551 Cap	Ductile Iron Powder Coated	15 lbs
3	1	R7500AN 1"	R7500 Anchor Casting 1"	Ductile Iron Hot Dip Galvanized	8 3/8 lbs
4	1	R7500BAR 1"	R7500 Threaded Bar 1" x 31"	Steel Plated	6 3/4 lbs
5	1	Washer 1" OD 3 1/2"	Washer 1" OD 3 1/2" Thick 1/4"	Steel Plated	5/8 lbs
6	1	Hex Nut 1"	Hex Nut 1" - requires 1 1/2" wrench	Steel Plated	1/4 lbs
7	3	Hexagon Socket Set Screw 3/8" x 3/4"	Hexagon Socket Set Screw 3/8" x 3/4" - requires 3/16" hex key	Stainless Steel	
8	3	Polyethylene Plug 3/8"	Polyethylene Plug 3/8"	LDPE Black	

RELIANCE FOUNDRY
SINCE 1925
Unit 207, 6450 - 148 Street, Surrey, BC V3S 7G7, Canada
1-877-789-3245 info@reliance-foundry.com
www.reliance-foundry.com

TITLE
Bollard R-7551

SIZE	DWG NO	REV
C	R7551	C4

NOT TO SCALE

COPYRIGHT RESERVED THIS PLAN DRAWING AND DESIGN ARE, AND AT ALL TIMES REMAIN, THE EXCLUSIVE PROPERTY OF RELIANCE FOUNDRY CO. LTD.

Bollard R-7551

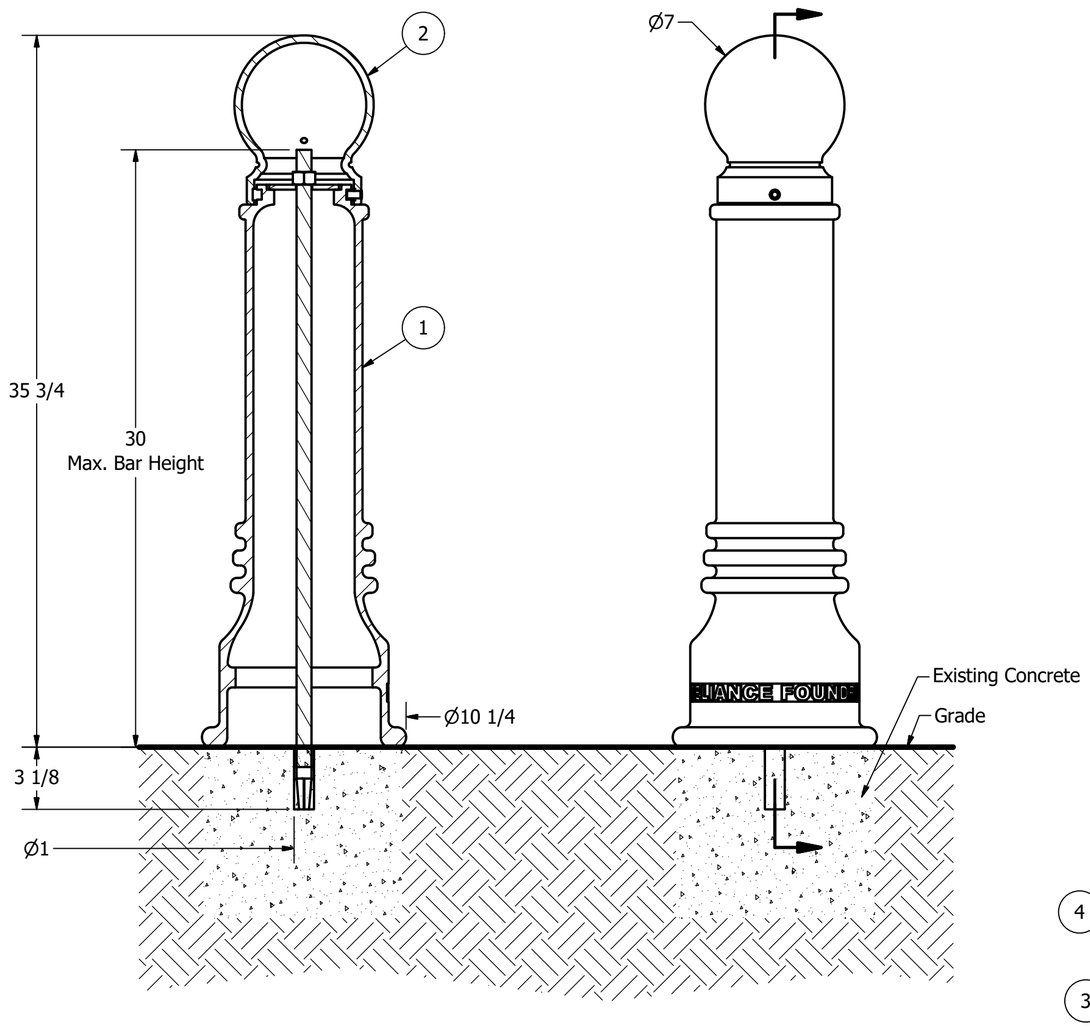

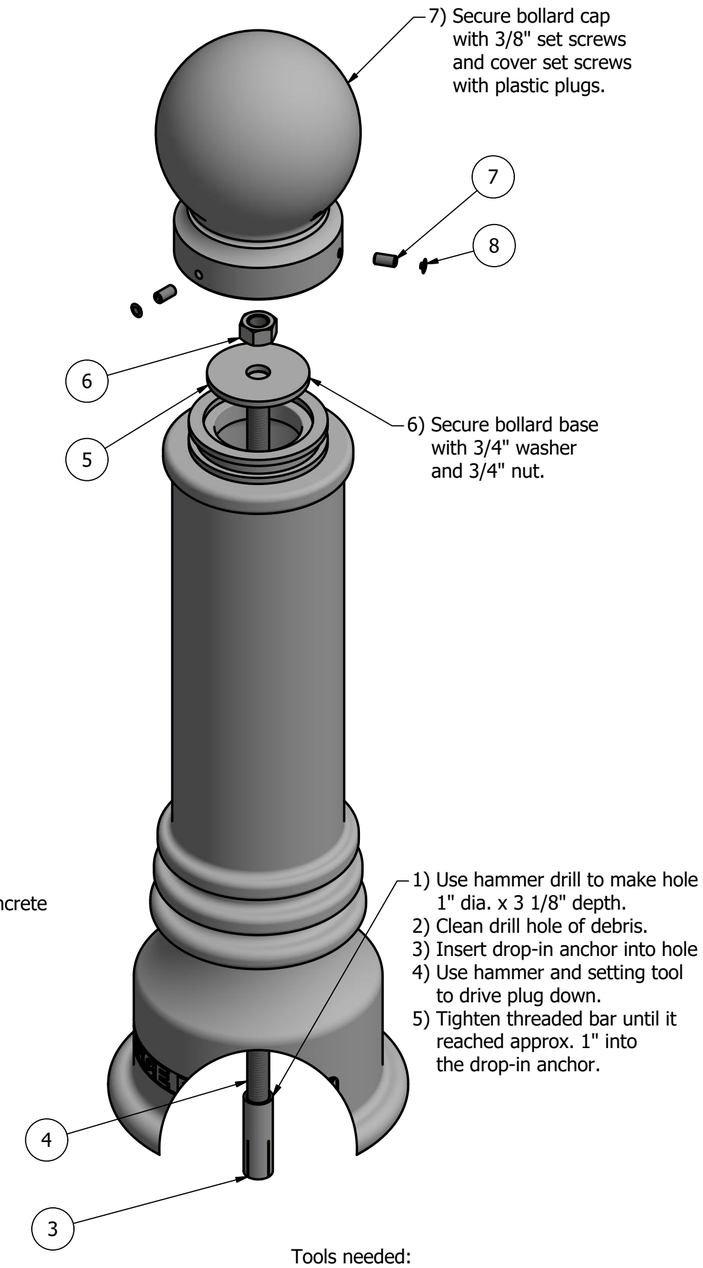

Notes:
1) Bollard post is provided as shown. Concrete, foundation and/or installation ordered separately or provided by others.
2) Minimum foundation sizes depend on local soil conditions, weather conditions, and engineering requirements.
3) Dimensions provided herein is for reference only. Please consult Reliance Foundry sales professionals if any dimension is critical to your particular installation.
4) Reliance Foundry reserves the right to amend design and specifications without prior notice for product improvement.

Tools needed:
1) Measuring tape
2) 1 1/8" wrench
3) 3/16" hex key
4) Hammer drill
5) 1" Masonry drill bit
6) Hammer
7) Drop-in concrete insert setting tool

PARTS LIST

ITEM	QTY	PART NUMBER	DESCRIPTION	MATERIAL	WEIGHT
1	1	R7551B	R7551 Base	Ductile Iron Powder Coated	63 lbs
2	1	R7551C	R7551 Cap	Ductile Iron Powder Coated	15 lbs
3	1	Drop-in Concrete Insert 3/4"	Drop-in Concrete Insert 3/4" - requires 1" x 3 1/8" hole (dia. x depth)	Steel Plated	1/2 lbs
4	1	R7500BAR 3/4"	R7500 Threaded Bar 3/4" x 31"	Steel Plated	3 1/4 lbs
5	1	Washer 3/4" OD 3 1/2"	Washer 3/4" OD 3 1/2" Thick 1/4"	Steel Plated	5/8 lbs
6	1	Hex Nut 3/4"	Hex Nut 3/4" - requires 1 1/8" wrench	Steel Plated	1/8 lbs
7	3	Hexagon Socket Set Screw 3/8" x 3/4"	Hexagon Socket Set Screw 3/8" x 3/4" - requires 3/16" hex key	Stainless Steel	
8	3	Polyethylene Plug 3/8"	Polyethylene Plug 3/8"	LDPE Black	

General Description:

The R-7551 Decorative Bollard is made from a versatile ductile iron, featuring a clean finish and spherical top casting. Bollard surfaces are protected by a durable powder coating, available in 6 standard colors, to prevent wear and corrosion. Use as fixed, stand-alone bollards or cover impact-resistant security posts. Removable mountings are available.

Specifications:

Height: 35 3/4"
Base Diameter: 10 1/4"
Weight: 78 lbs (Bollard Only)
Material: Ductile Iron
Max. Interior Security Post Size:
4 1/2" x 25" (Diameter x Height)

Finish Options:

⦿ Polyester Powdercoated

See Reliance Foundry's standard color options at:
www.reliance-foundry.com/bollard/colors-bollards

Installation Options:

○ Fixed - Anchor Casting in New Concrete (see sheet 2 of 12)
⦿ Fixed - Concrete Insert Anchor in Existing Concrete (see sheet 3 of 12)
○ Fixed - Adhesive Anchor in Existing Concrete (see sheet 4 of 12)
○ Fixed - Anchor Casting with Concrete Form (see sheet 5 of 12)
○ Post Cover - New Post in New Concrete (see sheet 6 of 12)
○ Post Cover - New Post in Existing Concrete (see sheet 7 of 12)
○ Post Cover - Existing Post with Adhesive Anchor (see sheet 8 of 12)
○ Post Cover - Existing Post with Concrete Anchor (see sheet 9 of 12)
○ Removable - Anchor Casting in New Concrete (see sheet 10 of 12)
○ Removable - Concrete Insert Anchor in Existing Concrete (see sheet 11 of 12)
○ Removable - Premium Retractable in New Concrete (see sheet 12 of 12)

For more information on bollard post installation, please visit:
www.reliance-foundry.com/bollard/installation-bollards

Care and Maintenance:

Reliance's line of bollards are finished with a long-lasting powder-coating. Proper care and maintenance are required. Regularly-performed inspections and routine cleaning will ensure that a bollard retains its aesthetic appeal and does not become damaged by the elements.

See Reliance Foundry's maintenance guide at:
www.reliance-foundry.com/bollard/maintenance-bollards

RELIANCE FOUNDRY
SINCE 1925
Unit 207, 6450 - 148 Street, Surrey, BC V3S 7G7, Canada
1-877-789-3245 info@reliance-foundry.com
www.reliance-foundry.com

TITLE
Bollard R-7551

SIZE	DWG NO	REV
C	R7551	C4

NOT TO SCALE | SHEET 3 OF 12

COPYRIGHT RESERVED THIS PLAN DRAWING AND DESIGN ARE, AND AT ALL TIMES REMAIN, THE EXCLUSIVE PROPERTY OF RELIANCE FOUNDRY CO. LTD.

Bollard R-7551

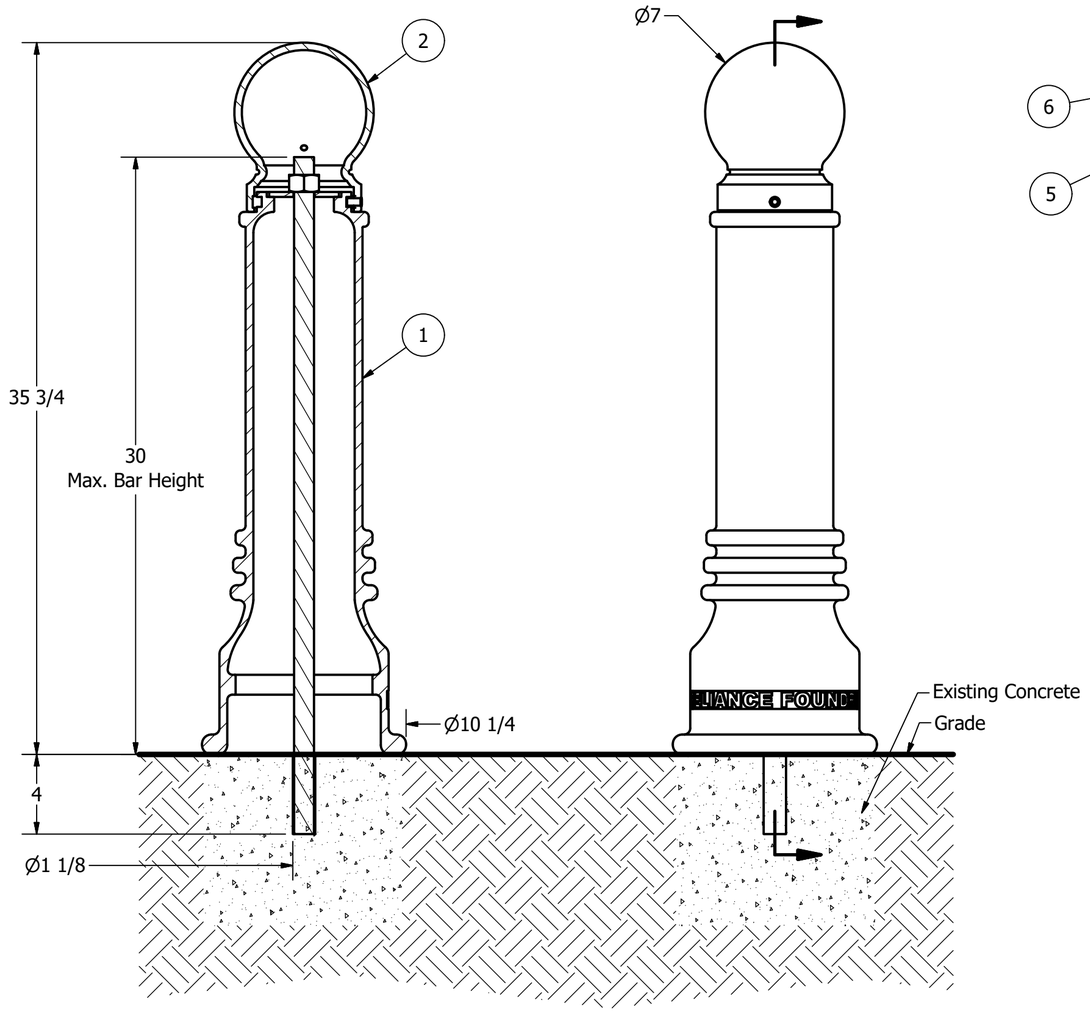

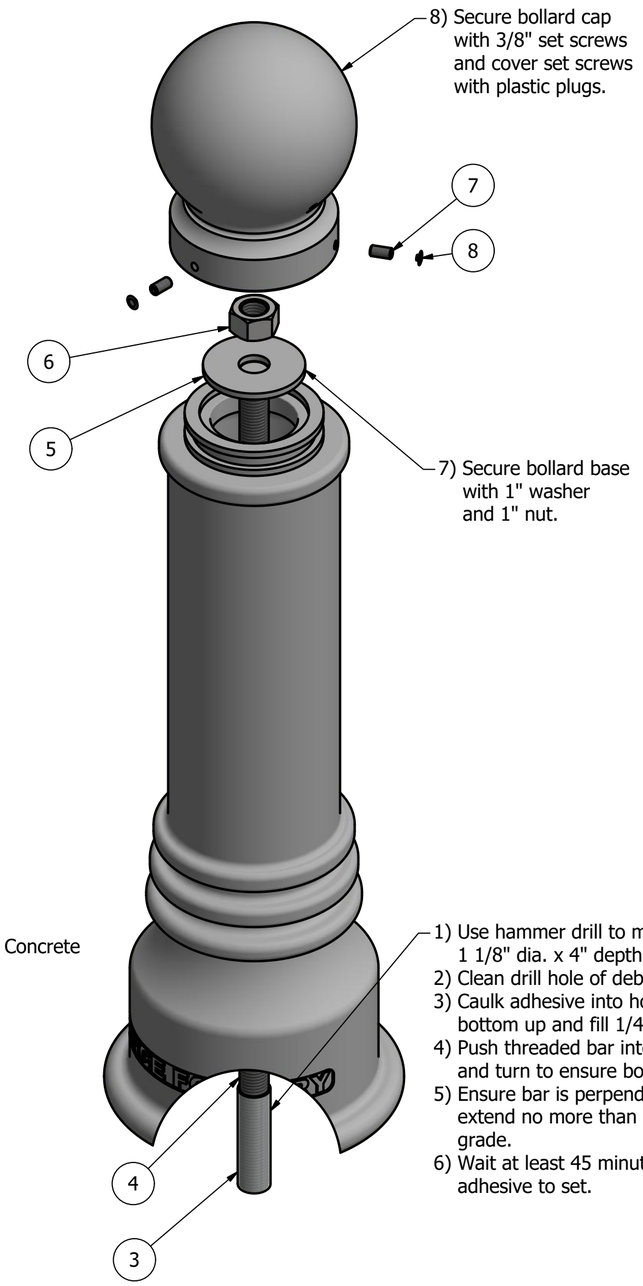

1) Use hammer drill to make hole 1 1/8" dia. x 4" depth.
2) Clean drill hole of debris.
3) Caulk adhesive into hole from bottom up and fill 1/4 full.
4) Push threaded bar into adhesive and turn to ensure bonding.
5) Ensure bar is perpendicular and extend no more than 30" above grade.
6) Wait at least 45 minutes for adhesive to set.

Tools needed:
1) Measuring tape
2) 1 1/2" wrench
3) 3/16" hex key
4) Hammer drill
5) 1 1/8" Masonry drill bit
6) Caulking gun and utility knife

General Description:

The R-7551 Decorative Bollard is made from a versatile ductile iron, featuring a clean finish and spherical top casting. Bollard surfaces are protected by a durable powder coating, available in 6 standard colors, to prevent wear and corrosion. Use as fixed, stand-alone bollards or cover impact-resistant security posts. Removable mountings are available.

Specifications:

Height: 35 3/4"
Base Diameter: 10 1/4"
Weight: 78 lbs (Bollard Only)
Material: Ductile Iron
Max. Interior Security Post Size:
4 1/2" x 25" (Diameter x Height)

Finish Options:

⦿ Polyester Powdercoated

See Reliance Foundry's standard color options at:
www.reliance-foundry.com/bollard/colors-bollards

Installation Options:

○ Fixed - Anchor Casting in New Concrete (see sheet 2 of 12)
○ Fixed - Concrete Insert Anchor in Existing Concrete (see sheet 3 of 12)
⦿ Fixed - Adhesive Anchor in Existing Concrete (see sheet 4 of 12)
○ Fixed - Anchor Casting with Concrete Form (see sheet 5 of 12)
○ Post Cover - New Post in New Concrete (see sheet 6 of 12)
○ Post Cover - New Post in Existing Concrete (see sheet 7 of 12)
○ Post Cover - Existing Post with Adhesive Anchor (see sheet 8 of 12)
○ Post Cover - Existing Post with Concrete Anchor (see sheet 9 of 12)
○ Removable - Anchor Casting in New Concrete (see sheet 10 of 12)
○ Removable - Concrete Insert Anchor in Existing Concrete (see sheet 11 of 12)
○ Removable - Premium Retractable in New Concrete (see sheet 12 of 12)

For more information on bollard post installation, please visit:
www.reliance-foundry.com/bollard/installation-bollards

Care and Maintenance:

Reliance's line of bollards are finished with a long-lasting powder-coating. Proper care and maintenance are required. Regularly-performed inspections and routine cleaning will ensure that a bollard retains its aesthetic appeal and does not become damaged by the elements.

See Reliance Foundry's maintenance guide at:
www.reliance-foundry.com/bollard/maintenance-bollards

Notes:
1) Bollard post is provided as shown. Concrete, foundation and/or installation ordered separately or provided by others.
2) Minimum foundation sizes depend on local soil conditions, weather conditions, and engineering requirements.
3) Dimensions provided herein is for reference only. Please consult Reliance Foundry sales professionals if any dimension is critical to your particular installation.
4) Reliance Foundry reserves the right to amend design and specifications without prior notice for product improvement.

PARTS LIST

ITEM	QTY	PART NUMBER	DESCRIPTION	MATERIAL	WEIGHT
1	1	R7551B	R7551 Base	Ductile Iron Powder Coated	63 lbs
2	1	R7551C	R7551 Cap	Ductile Iron Powder Coated	15 lbs
3	1	Adhesive Anchor	AC100+ Gold Adhesive Anchoring System	Vinylester Adhesive Mortar	5/8 lbs
4	1	R7500BAR 1"	R7500 Threaded Bar 1" x 34"	Steel Plated	6 1/4 lbs
5	1	Washer 1" OD 3 1/2"	Washer 1" OD 3 1/2" Thick 1/4"	Steel Plated	5/8 lbs
6	1	Hex Nut 1"	Hex Nut 1" - requires 1 1/2" wrench	Steel Plated	1/4 lbs
7	3	Hexagon Socket Set Screw 3/8" x 3/4"	Hexagon Socket Set Screw 3/8" x 3/4" - requires 3/16" hex key	Stainless Steel	
8	3	Polyethylene Plug 3/8"	Polyethylene Plug 3/8"	LDPE Black	

COPYRIGHT RESERVED THIS PLAN DRAWING AND DESIGN ARE, AND AT ALL TIMES REMAIN, THE EXCLUSIVE PROPERTY OF RELIANCE FOUNDRY CO. LTD.

RELIANCE FOUNDRY
SINCE 1925
Unit 207, 6450 - 148 Street, Surrey, BC V3S 7G7, Canada
1-877-789-3245 info@reliance-foundry.com
www.reliance-foundry.com

TITLE
Bollard R-7551

SIZE	DWG NO	REV
C	R7551	C4

NOT TO SCALE

Bollard R-7551

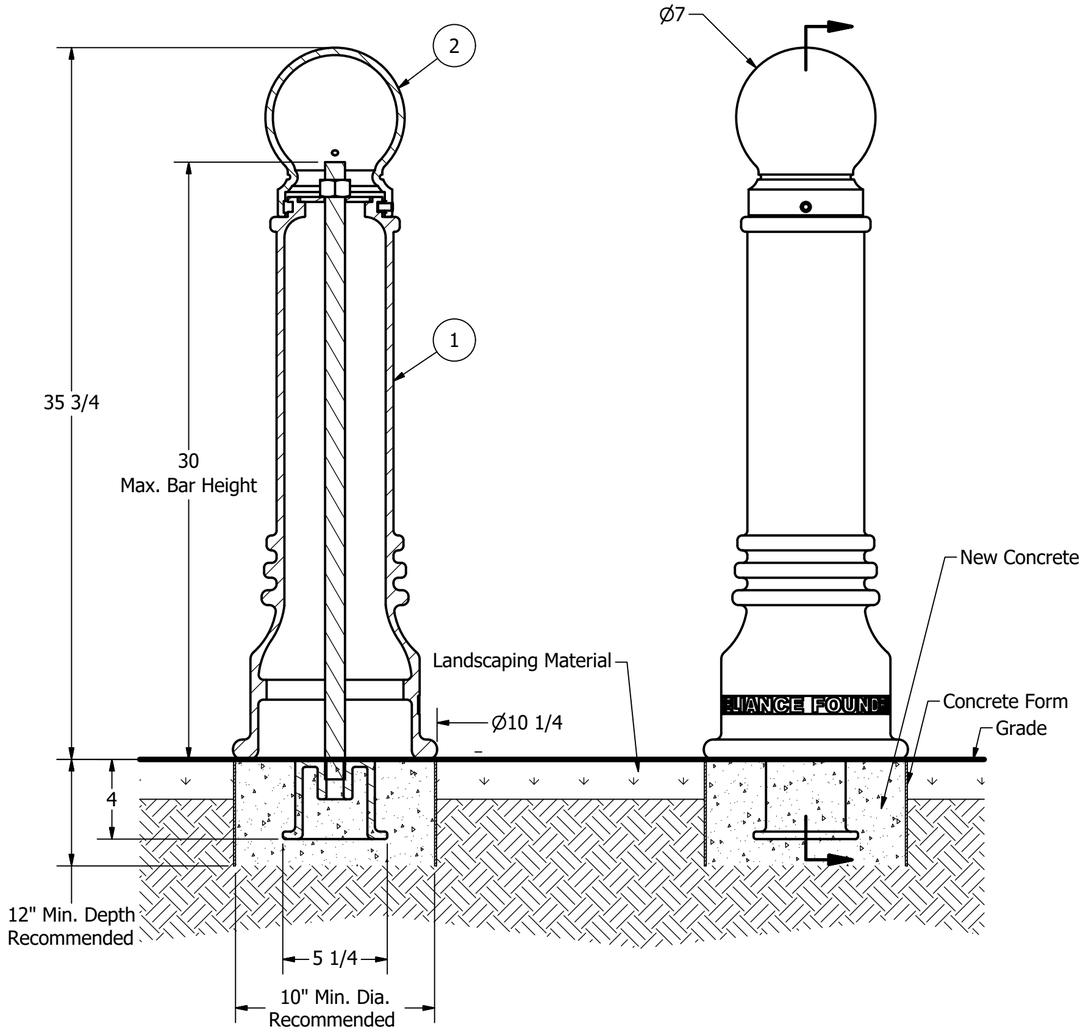

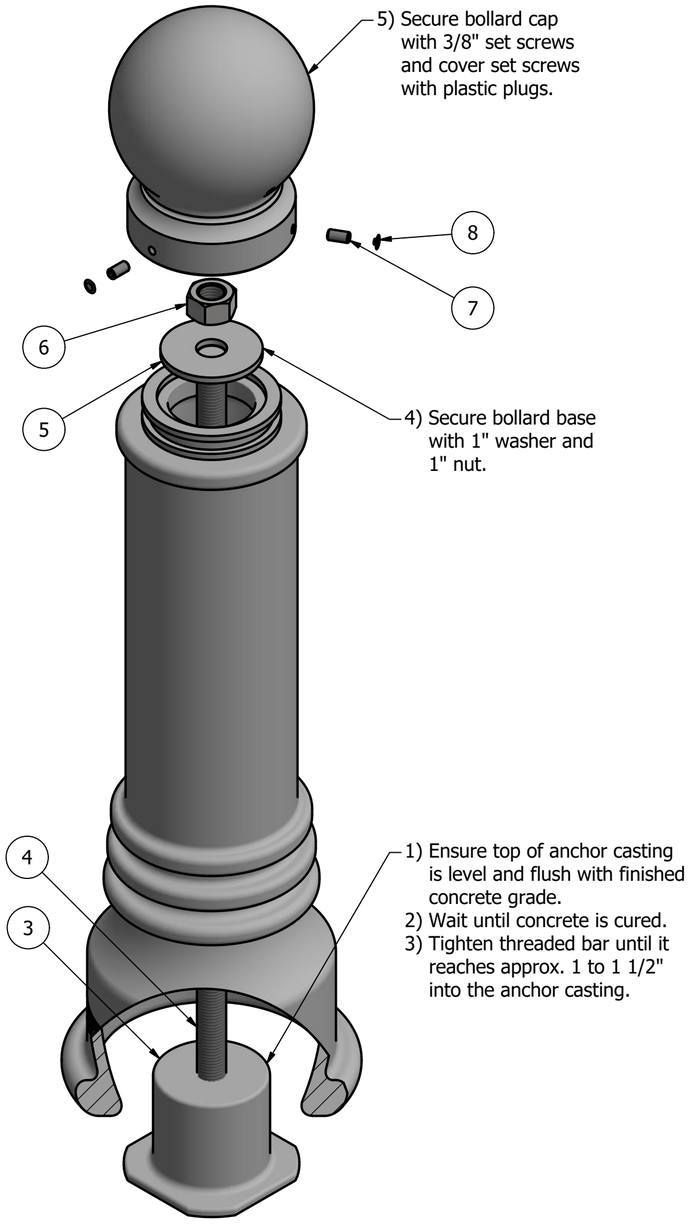

General Description:

The R-7551 Decorative Bollard is made from a versatile ductile iron, featuring a clean finish and spherical top casting. Bollard surfaces are protected by a durable powder coating, available in 6 standard colors, to prevent wear and corrosion. Use as fixed, stand-alone bollards or cover impact-resistant security posts. Removable mountings are available.

Specifications:

Height: 35 3/4"
Base Diameter: 10 1/4"
Weight: 78 lbs (Bollard Only)
Material: Ductile Iron
Max. Interior Security Post Size:
4 1/2" x 25" (Diameter x Height)

Finish Options:

⦿ Polyester Powdercoated

See Reliance Foundry's standard color options at:
www.reliance-foundry.com/bollard/colors-bollards

Installation Options:

○ Fixed - Anchor Casting in New Concrete (see sheet 2 of 12)
○ Fixed - Concrete Insert Anchor in Existing Concrete (see sheet 3 of 12)
○ Fixed - Adhesive Anchor in Existing Concrete (see sheet 4 of 12)
⦿ Fixed - Anchor Casting with Concrete Form (see sheet 5 of 12)
○ Post Cover - New Post in New Concrete (see sheet 6 of 12)
○ Post Cover - New Post in Existing Concrete (see sheet 7 of 12)
○ Post Cover - Existing Post with Adhesive Anchor (see sheet 8 of 12)
○ Post Cover - Existing Post with Concrete Anchor (see sheet 9 of 12)
○ Removable - Anchor Casting in New Concrete (see sheet 10 of 12)
○ Removable - Concrete Insert Anchor in Existing Concrete (see sheet 11 of 12)
○ Removable - Premium Retractable in New Concrete (see sheet 12 of 12)

For more information on bollard post installation, please visit:
www.reliance-foundry.com/bollard/installation-bollards

Care and Maintenance:

Reliance's line of bollards are finished with a long-lasting powder-coating. Proper care and maintenance are required. Regularly-performed inspections and routine cleaning will ensure that a bollard retains its aesthetic appeal and does not become damaged by the elements.

See Reliance Foundry's maintenance guide at:
www.reliance-foundry.com/bollard/maintenance-bollards

Notes:
1) Bollard post is provided as shown. Concrete, foundation and/or installation ordered separately or provided by others.
2) Minimum foundation sizes depend on local soil conditions, weather conditions, and engineering requirements.
3) Dimensions provided herein is for reference only. Please consult Reliance Foundry sales professionals if any dimension is critical to your particular installation.
4) Reliance Foundry reserves the right to amend design and specifications without prior notice for product improvement.

Tools needed:
1) Measuring tape
2) 1 1/2" wrench
3) 3/16" hex key

PARTS LIST

ITEM	QTY	PART NUMBER	DESCRIPTION	MATERIAL	WEIGHT
1	1	R7551B	R7551 Base	Ductile Iron Powder Coated	63 lbs
2	1	R7551C	R7551 Cap	Ductile Iron Powder Coated	15 lbs
3	1	R7500AN 1"	R7500 Anchor Casting 1"	Ductile Iron Hot Dip Galvanized	8 3/8 lbs
4	1	R7500BAR 1"	R7500 Threaded Bar 1" x 31"	Steel Plated	6 3/4 lbs
5	1	Washer 1" OD 3 1/2"	Washer 1" OD 3 1/2" Thick 1/4"	Steel Plated	5/8 lbs
6	1	Hex Nut 1"	Hex Nut 1" - requires 1 1/2" wrench	Steel Plated	1/4 lbs
7	3	Hexagon Socket Set Screw 3/8" x 3/4"	Hexagon Socket Set Screw 3/8" x 3/4" - requires 3/16" hex key	Stainless Steel	
8	3	Polyethylene Plug 3/8"	Polyethylene Plug 3/8"	LDPE Black	

RELIANCE FOUNDRY SINCE 1925
Unit 207, 6450 - 148 Street, Surrey, BC V3S 7G7, Canada
1-877-789-3245 info@reliance-foundry.com
www.reliance-foundry.com

TITLE
Bollard R-7551

SIZE	DWG NO	REV
C	R7551	C4

NOT TO SCALE | SHEET 5 OF 12

COPYRIGHT RESERVED THIS PLAN DRAWING AND DESIGN ARE, AND AT ALL TIMES REMAIN, THE EXCLUSIVE PROPERTY OF RELIANCE FOUNDRY CO. LTD.

Bollard R-7551

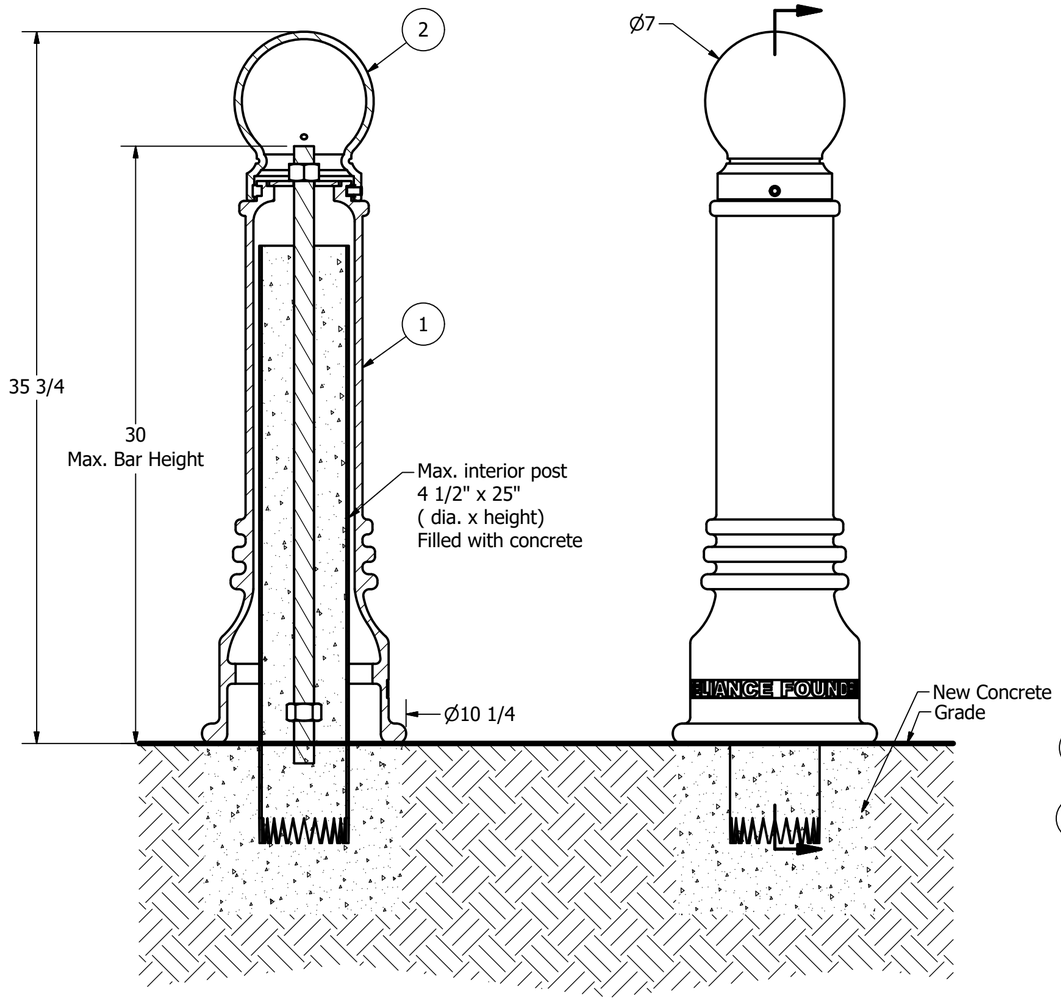

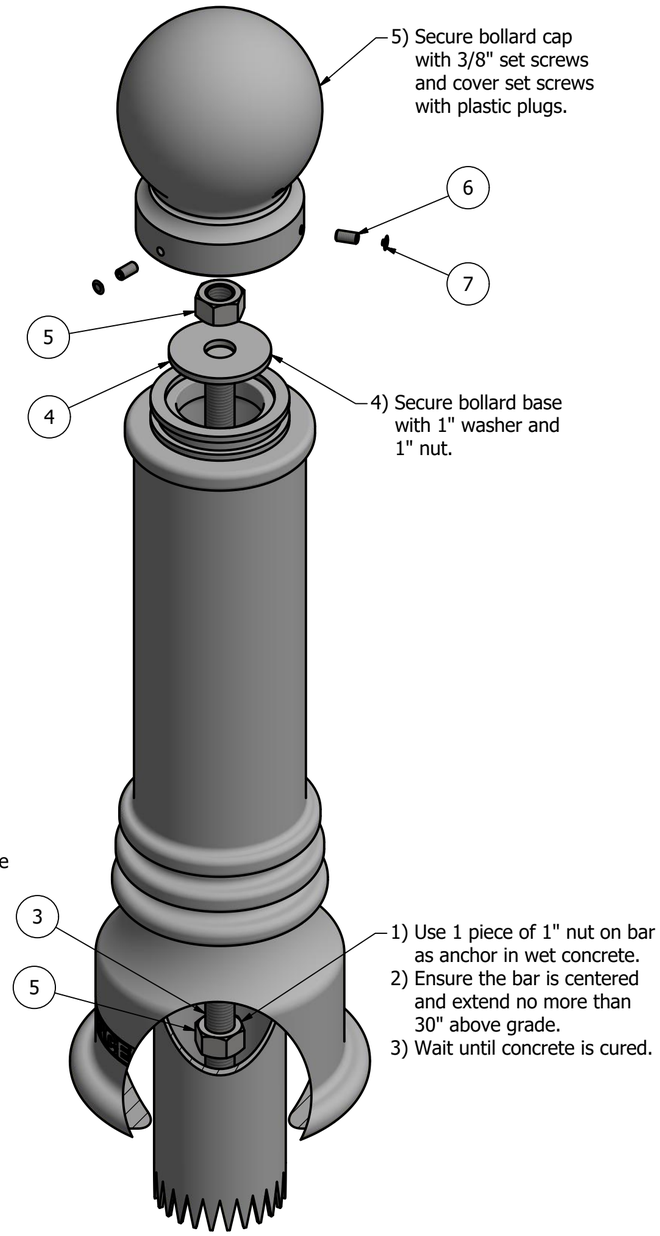

General Description:

The R-7551 Decorative Bollard is made from a versatile ductile iron, featuring a clean finish and spherical top casting. Bollard surfaces are protected by a durable powder coating, available in 6 standard colors, to prevent wear and corrosion. Use as fixed, stand-alone bollards or cover impact-resistant security posts. Removable mountings are available.

Specifications:

Height: 35 3/4"
Base Diameter: 10 1/4"
Weight: 78 lbs (Bollard Only)
Material: Ductile Iron
Max. Interior Security Post Size:
4 1/2" x 25" (Diameter x Height)

Finish Options:

⦿ Polyester Powdercoated

See Reliance Foundry's standard color options at:
www.reliance-foundry.com/bollard/colors-bollards

Installation Options:

- ○ Fixed - Anchor Casting in New Concrete (see sheet 2 of 12)
- ○ Fixed - Concrete Insert Anchor in Existing Concrete (see sheet 3 of 12)
- ○ Fixed - Adhesive Anchor in Existing Concrete (see sheet 4 of 12)
- ○ Fixed - Anchor Casting with Concrete Form (see sheet 5 of 12)
- ⦿ Post Cover - New Post in New Concrete (see sheet 6 of 12)
- ○ Post Cover - New Post in Existing Concrete (see sheet 7 of 12)
- ○ Post Cover - Existing Post with Adhesive Anchor (see sheet 8 of 12)
- ○ Post Cover - Existing Post with Concrete Anchor (see sheet 9 of 12)
- ○ Removable - Anchor Casting in New Concrete (see sheet 10 of 12)
- ○ Removable - Concrete Insert Anchor in Existing Concrete (see sheet 11 of 12)
- ○ Removable - Premium Retractable in New Concrete (see sheet 12 of 12)

For more information on bollard post installation, please visit:
www.reliance-foundry.com/bollard/installation-bollards

Care and Maintenance:

Reliance's line of bollards are finished with a long-lasting powder-coating. Proper care and maintenance are required. Regularly-performed inspections and routine cleaning will ensure that a bollard retains its aesthetic appeal and does not become damaged by the elements.

See Reliance Foundry's maintenance guide at:
www.reliance-foundry.com/bollard/maintenance-bollards

Notes:
1) Bollard post is provided as shown. Concrete, foundation and/or installation ordered separately or provided by others.
2) Minimum foundation sizes depend on local soil conditions, weather conditions, and engineering requirements.
3) Dimensions provided herein is for reference only. Please consult Reliance Foundry sales professionals if any dimension is critical to your particular installation.
4) Reliance Foundry reserves the right to amend design and specifications without prior notice for product improvement.

Tools needed:
1) Measuring tape
2) 1 1/2" wrench
3) 3/16" hex key

PARTS LIST

ITEM	QTY	PART NUMBER	DESCRIPTION	MATERIAL	WEIGHT
1	1	R7551B	R7551 Base	Ductile Iron Powder Coated	63 lbs
2	1	R7551C	R7551 Cap	Ductile Iron Powder Coated	15 lbs
3	1	R7500BAR 1"	R7500 Threaded Bar 1" x 31"	Steel Plated	6 3/4 lbs
4	1	Washer 1" OD 3 1/2"	Washer 1" OD 3 1/2" Thick 1/4"	Steel Plated	5/8 lbs
5	2	Hex Nut 1"	Hex Nut 1" - requires 1 1/2" wrench	Steel Plated	1/4 lbs
6	3	Hexagon Socket Set Screw 3/8" x 3/4"	Hexagon Socket Set Screw 3/8" x 3/4" - requires 3/16" hex key	Stainless Steel	
7	3	Polyethylene Plug 3/8"	Polyethylene Plug 3/8"	LDPE Black	

RELIANCE FOUNDRY
SINCE 1925
Unit 207, 6450 - 148 Street, Surrey, BC V3S 7G7, Canada
1-877-789-3245 info@reliance-foundry.com
www.reliance-foundry.com

TITLE
Bollard R-7551

SIZE	DWG NO	REV
C	R7551	C4

NOT TO SCALE | SHEET 6 OF 12

COPYRIGHT RESERVED THIS PLAN DRAWING AND DESIGN ARE, AND AT ALL TIMES REMAIN, THE EXCLUSIVE PROPERTY OF RELIANCE FOUNDRY CO. LTD.

Bollard R-7551

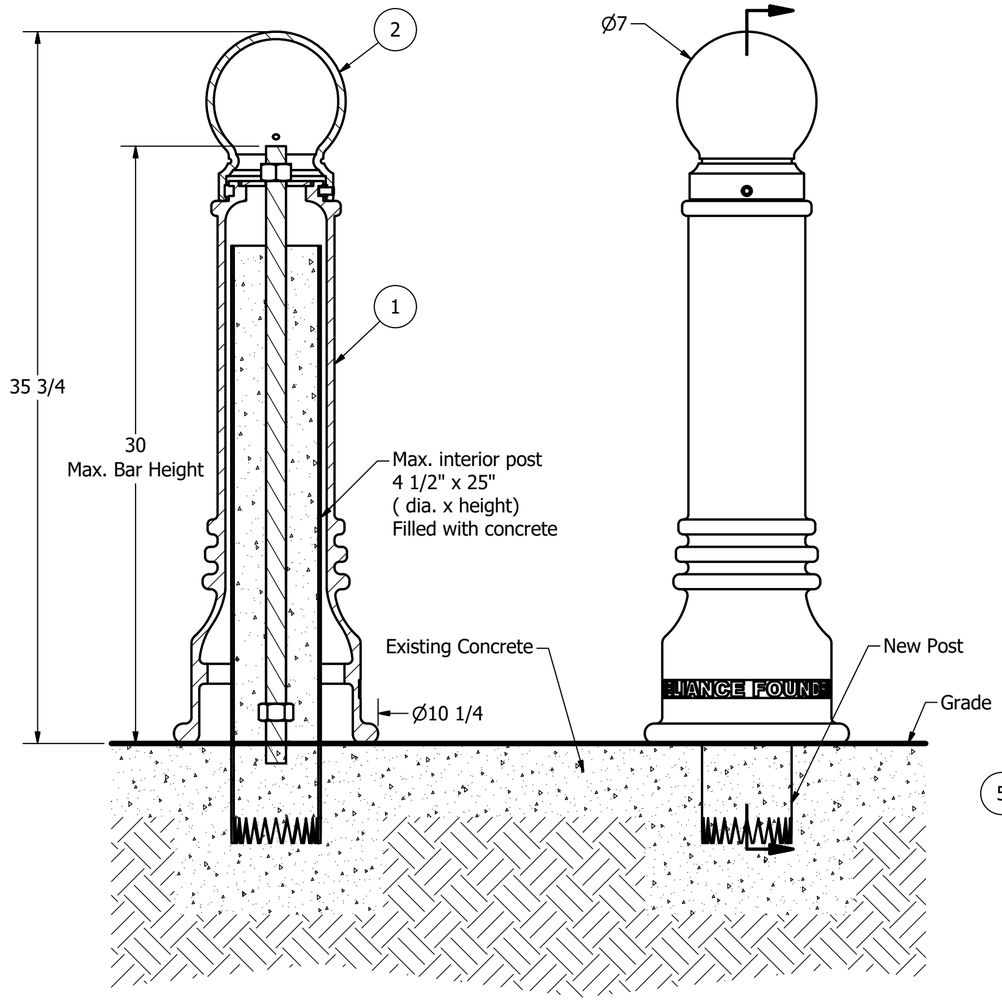

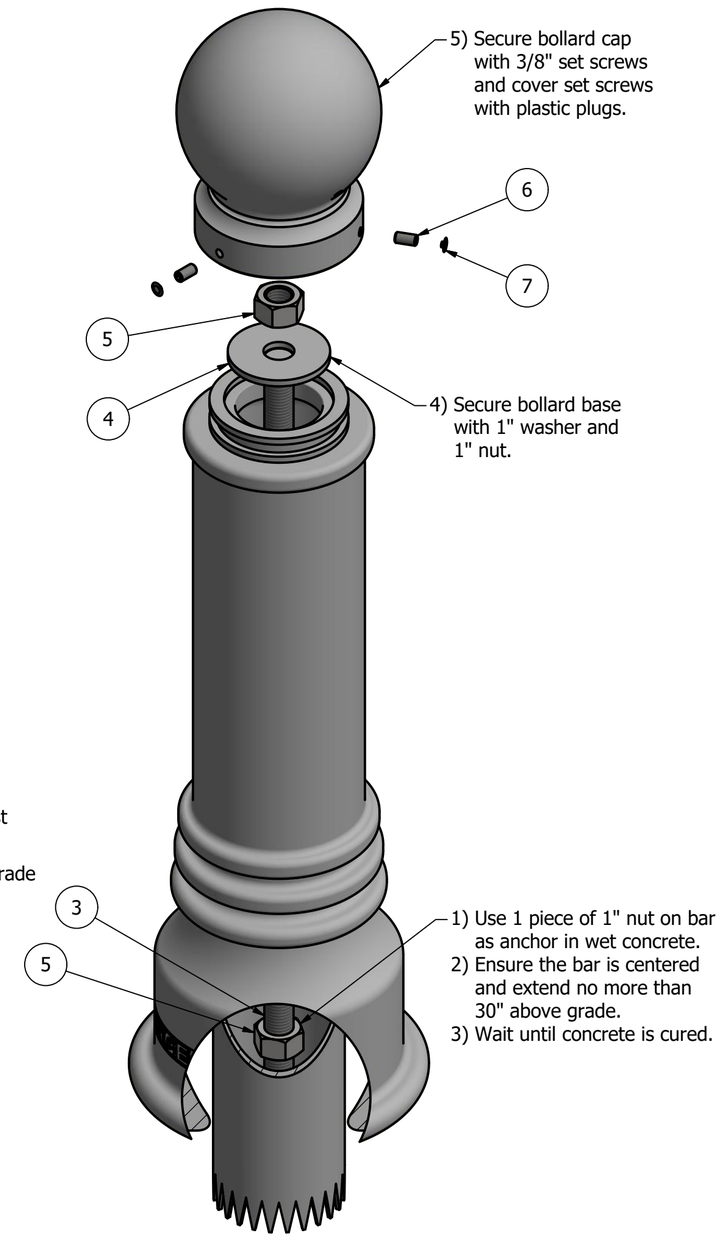

General Description:

The R-7551 Decorative Bollard is made from a versatile ductile iron, featuring a clean finish and spherical top casting. Bollard surfaces are protected by a durable powder coating, available in 6 standard colors, to prevent wear and corrosion. Use as fixed, stand-alone bollards or cover impact-resistant security posts. Removable mountings are available.

Specifications:

Height: 35 3/4"
Base Diameter: 10 1/4"
Weight: 78 lbs (Bollard Only)
Material: Ductile Iron
Max. Interior Security Post Size:
4 1/2" x 25" (Diameter x Height)

Finish Options:

⦿ Polyester Powdercoated

See Reliance Foundry's standard color options at:
www.reliance-foundry.com/bollard/colors-bollards

Installation Options:

○ Fixed - Anchor Casting in New Concrete (see sheet 2 of 12)
○ Fixed - Concrete Insert Anchor in Existing Concrete (see sheet 3 of 12)
○ Fixed - Adhesive Anchor in Existing Concrete (see sheet 4 of 12)
○ Fixed - Anchor Casting with Concrete Form (see sheet 5 of 12)
○ Post Cover - New Post in New Concrete (see sheet 6 of 12)
⦿ Post Cover - New Post in Existing Concrete (see sheet 7 of 12)
○ Post Cover - Existing Post with Adhesive Anchor (see sheet 8 of 12)
○ Post Cover - Existing Post with Concrete Anchor (see sheet 9 of 12)
○ Removable - Anchor Casting in New Concrete (see sheet 10 of 12)
○ Removable - Concrete Insert Anchor in Existing Concrete (see sheet 11 of 12)
○ Removable - Premium Retractable in New Concrete (see sheet 12 of 12)

For more information on bollard post installation, please visit:
www.reliance-foundry.com/bollard/installation-bollards

Care and Maintenance:

Reliance's line of bollards are finished with a long-lasting powder-coating. Proper care and maintenance are required. Regularly-performed inspections and routine cleaning will ensure that a bollard retains its aesthetic appeal and does not become damaged by the elements.

See Reliance Foundry's maintenance guide at:
www.reliance-foundry.com/bollard/maintenance-bollards

Notes:
1) Bollard post is provided as shown. Concrete, foundation and/or installation ordered separately or provided by others.
2) Minimum foundation sizes depend on local soil conditions, weather conditions, and engineering requirements.
3) Dimensions provided herein is for reference only. Please consult Reliance Foundry sales professionals if any dimension is critical to your particular installation.
4) Reliance Foundry reserves the right to amend design and specifications without prior notice for product improvement.

Tools needed:
1) Measuring tape
2) 1 1/2" wrench
3) 3/16" hex key

PARTS LIST

ITEM	QTY	PART NUMBER	DESCRIPTION	MATERIAL	WEIGHT
1	1	R7551B	R7551 Base	Ductile Iron Powder Coated	63 lbs
2	1	R7551C	R7551 Cap	Ductile Iron Powder Coated	15 lbs
3	1	R7500BAR 1"	R7500 Threaded Bar 1" x 31"	Steel Plated	6 3/4 lbs
4	1	Washer 1" OD 3 1/2"	Washer 1" OD 3 1/2" Thick 1/4"	Steel Plated	5/8 lbs
5	2	Hex Nut 1"	Hex Nut 1" - requires 1 1/2" wrench	Steel Plated	1/4 lbs
6	3	Hexagon Socket Set Screw 3/8" x 3/4"	Hexagon Socket Set Screw 3/8" x 3/4" - requires 3/16" hex key	Stainless Steel	
7	3	Polyethylene Plug 3/8"	Polyethylene Plug 3/8"	LDPE Black	

RELIANCE FOUNDRY
SINCE 1925
Unit 207, 6450 - 148 Street, Surrey, BC V3S 7G7, Canada
1-877-789-3245 info@reliance-foundry.com
www.reliance-foundry.com

TITLE
Bollard R-7551

SIZE	DWG NO	REV
C	R7551	C4

NOT TO SCALE | SHEET 7 OF 12

COPYRIGHT RESERVED THIS PLAN DRAWING AND DESIGN ARE, AND AT ALL TIMES REMAIN, THE EXCLUSIVE PROPERTY OF RELIANCE FOUNDRY CO. LTD.

Bollard R-7551

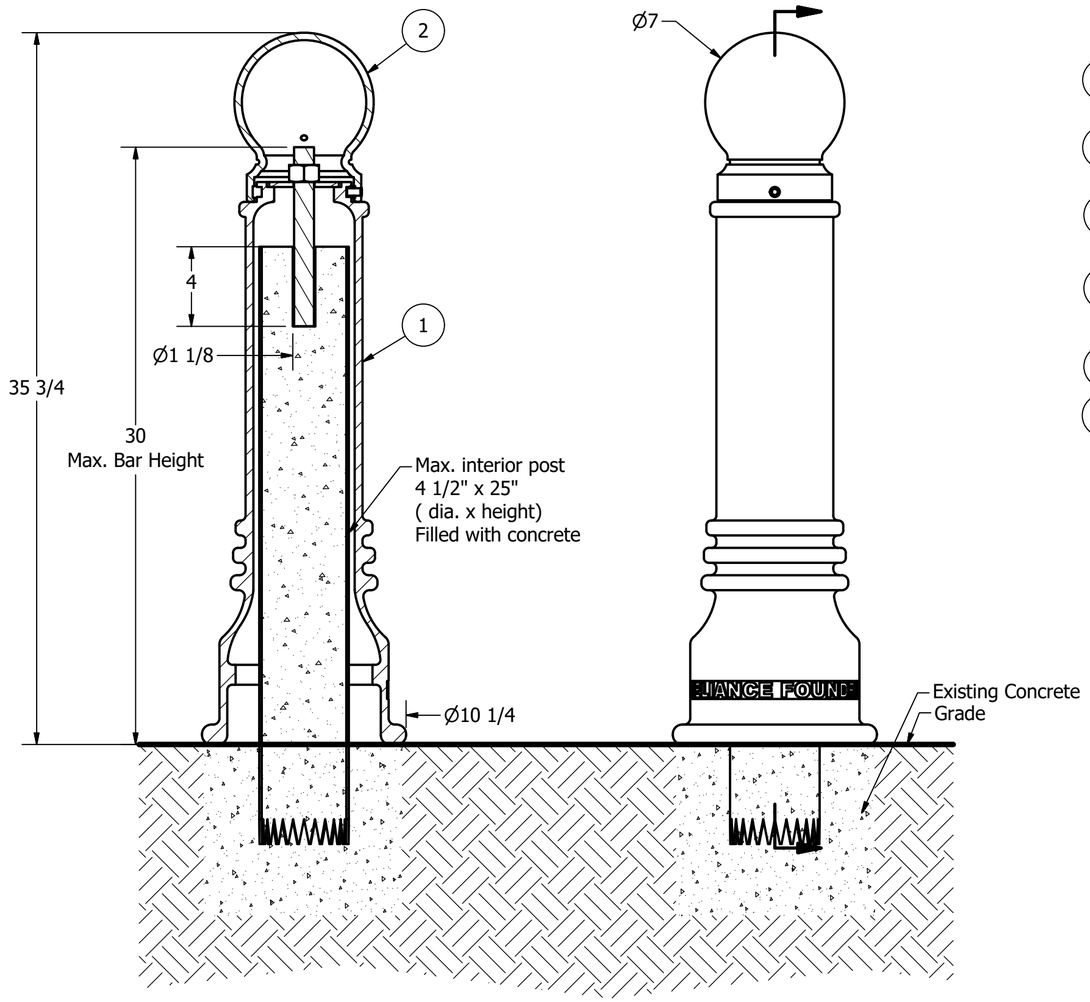

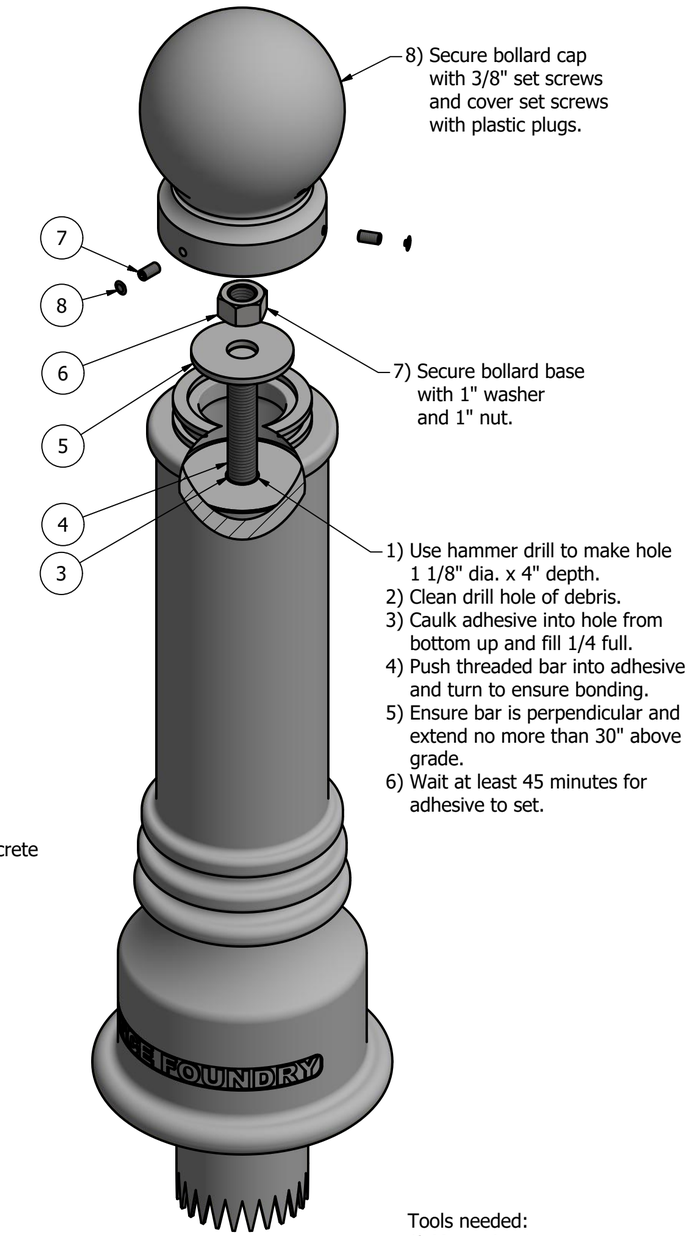

Notes:
1) Bollard post is provided as shown. Concrete, foundation and/or installation ordered separately or provided by others.
2) Minimum foundation sizes depend on local soil conditions, weather conditions, and engineering requirements.
3) Dimensions provided herein is for reference only. Please consult Reliance Foundry sales professionals if any dimension is critical to your particular installation.
4) Reliance Foundry reserves the right to amend design and specifications without prior notice for product improvement.

Tools needed:
1) Measuring tape
2) 1 1/2" wrench
3) 3/16" hex key
4) Hammer drill
5) 1 1/8" Masonry drill bit
6) Caulking gun and utility knife

PARTS LIST

ITEM	QTY	PART NUMBER	DESCRIPTION	MATERIAL	WEIGHT
1	1	R7551B	R7551 Base	Ductile Iron Powder Coated	63 lbs
2	1	R7551C	R7551 Cap	Ductile Iron Powder Coated	15 lbs
3	1	Adhesive Anchor	AC100+ Gold Adhesive Anchoring System	Vinylester Adhesive Mortar	5/8 lbs
4	1	R7500BAR 1"	R7500 Threaded Bar 1" Custom Order Length	Steel Plated	TBD
5	1	Washer 1" OD 3 1/2"	Washer 1" OD 3 1/2" Thick 1/4"	Steel Plated	5/8 lbs
6	1	Hex Nut 1"	Hex Nut 1" - requires 1 1/2" wrench	Steel Plated	1/4 lbs
7	3	Hexagon Socket Set Screw 3/8" x 3/4"	Hexagon Socket Set Screw 3/8" x 3/4" - requires 3/16" hex key	Stainless Steel	
8	3	Polyethylene Plug 3/8"	Polyethylene Plug 3/8"	LDPE Black	

General Description:

The R-7551 Decorative Bollard is made from a versatile ductile iron, featuring a clean finish and spherical top casting. Bollard surfaces are protected by a durable powder coating, available in 6 standard colors, to prevent wear and corrosion. Use as fixed, stand-alone bollards or cover impact-resistant security posts. Removable mountings are available.

Specifications:

Height: 35 3/4"
Base Diameter: 10 1/4"
Weight: 78 lbs (Bollard Only)
Material: Ductile Iron
Max. Interior Security Post Size:
4 1/2" x 25" (Diameter x Height)

Finish Options:

⦿ Polyester Powdercoated

See Reliance Foundry's standard color options at:
www.reliance-foundry.com/bollard/colors-bollards

Installation Options:

○ Fixed - Anchor Casting in New Concrete (see sheet 2 of 12)
○ Fixed - Concrete Insert Anchor in Existing Concrete (see sheet 3 of 12)
○ Fixed - Adhesive Anchor in Existing Concrete (see sheet 4 of 12)
○ Fixed - Anchor Casting with Concrete Form (see sheet 5 of 12)
○ Post Cover - New Post in New Concrete (see sheet 6 of 12)
○ Post Cover - New Post in Existing Concrete (see sheet 7 of 12)
⦿ Post Cover - Existing Post with Adhesive Anchor (see sheet 8 of 12)
○ Post Cover - Existing Post with Concrete Anchor (see sheet 9 of 12)
○ Removable - Anchor Casting in New Concrete (see sheet 10 of 12)
○ Removable - Concrete Insert Anchor in Existing Concrete (see sheet 11 of 12)
○ Removable - Premium Retractable in New Concrete (see sheet 12 of 12)

For more information on bollard post installation, please visit:
www.reliance-foundry.com/bollard/installation-bollards

Care and Maintenance:

Reliance's line of bollards are finished with a long-lasting powder-coating. Proper care and maintenance are required. Regularly-performed inspections and routine cleaning will ensure that a bollard retains its aesthetic appeal and does not become damaged by the elements.

See Reliance Foundry's maintenance guide at:
www.reliance-foundry.com/bollard/maintenance-bollards

RELIANCE FOUNDRY
SINCE 1925
Unit 207, 6450 - 148 Street, Surrey, BC V3S 7G7, Canada
1-877-789-3245 info@reliance-foundry.com
www.reliance-foundry.com

TITLE
Bollard R-7551

SIZE	DWG NO	REV
C	R7551	C4

NOT TO SCALE | SHEET 8 OF 12

COPYRIGHT RESERVED THIS PLAN DRAWING AND DESIGN ARE, AND AT ALL TIMES REMAIN, THE EXCLUSIVE PROPERTY OF RELIANCE FOUNDRY CO. LTD.

Bollard R-7551

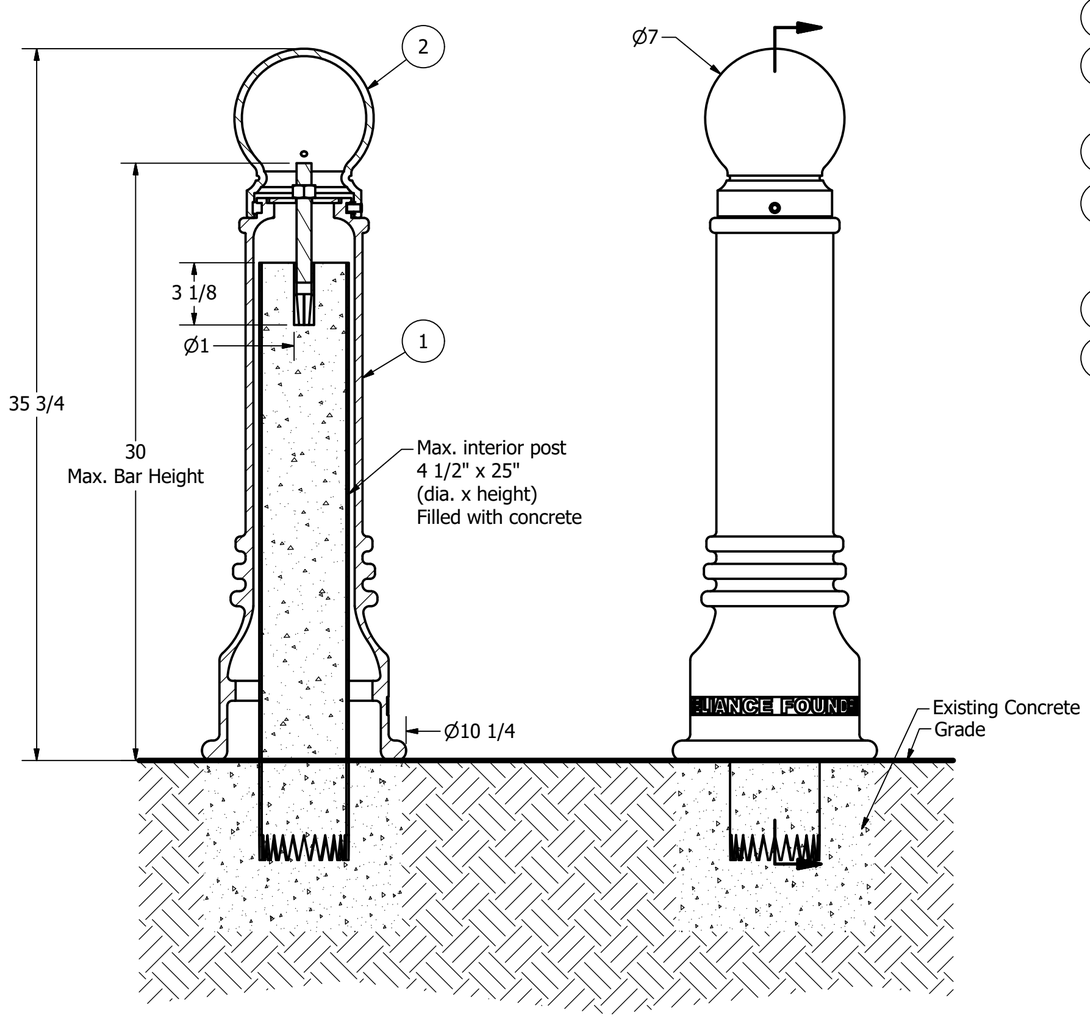

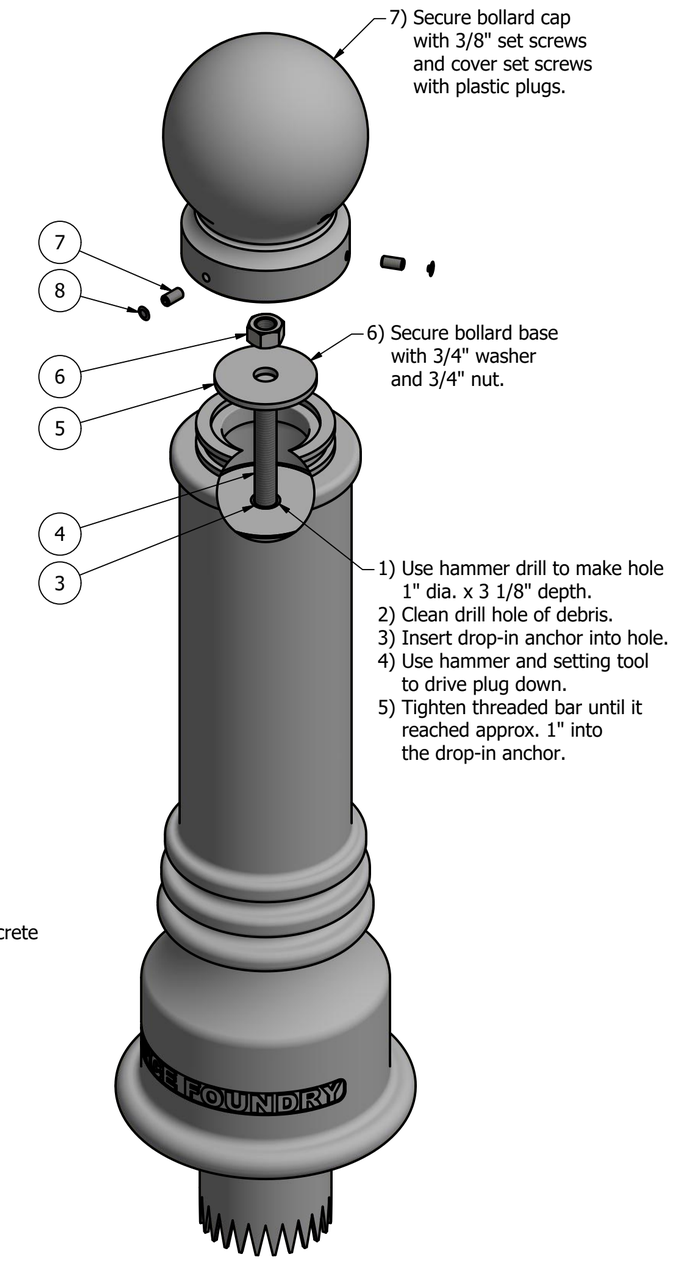

General Description:

The R-7551 Decorative Bollard is made from a versatile ductile iron, featuring a clean finish and spherical top casting. Bollard surfaces are protected by a durable powder coating, available in 6 standard colors, to prevent wear and corrosion. Use as fixed, stand-alone bollards or cover impact-resistant security posts. Removable mountings are available.

Specifications:

Height: 35 3/4"
Base Diameter: 10 1/4"
Weight: 78 lbs (Bollard Only)
Material: Ductile Iron
Max. Interior Security Post Size:
4 1/2" x 25" (Diameter x Height)

Finish Options:

⦿ Polyester Powdercoated

See Reliance Foundry's standard color options at:
www.reliance-foundry.com/bollard/colors-bollards

Installation Options:

- ○ Fixed - Anchor Casting in New Concrete (see sheet 2 of 12)
- ○ Fixed - Concrete Insert Anchor in Existing Concrete (see sheet 3 of 12)
- ○ Fixed - Adhesive Anchor in Existing Concrete (see sheet 4 of 12)
- ○ Fixed - Anchor Casting with Concrete Form (see sheet 5 of 12)
- ○ Post Cover - New Post in New Concrete (see sheet 6 of 12)
- ○ Post Cover - New Post in Existing Concrete (see sheet 7 of 12)
- ○ Post Cover - Existing Post with Adhesive Anchor (see sheet 8 of 12)
- ⦿ Post Cover - Existing Post with Concrete Anchor (see sheet 9 of 12)
- ○ Removable - Anchor Casting in New Concrete (see sheet 10 of 12)
- ○ Removable - Concrete Insert Anchor in Existing Concrete (see sheet 11 of 12)
- ○ Removable - Premium Retractable in New Concrete (see sheet 12 of 12)

For more information on bollard post installation, please visit:
www.reliance-foundry.com/bollard/installation-bollards

Care and Maintenance:

Reliance's line of bollards are finished with a long-lasting powder-coating. Proper care and maintenance are required. Regularly-performed inspections and routine cleaning will ensure that a bollard retains its aesthetic appeal and does not become damaged by the elements.

See Reliance Foundry's maintenance guide at:
www.reliance-foundry.com/bollard/maintenance-bollards

Notes:
1) Bollard post is provided as shown. Concrete, foundation and/or installation ordered separately or provided by others.
2) Minimum foundation sizes depend on local soil conditions, weather conditions, and engineering requirements.
3) Dimensions provided herein is for reference only. Please consult Reliance Foundry sales professionals if any dimension is critical to your particular installation.
4) Reliance Foundry reserves the right to amend design and specifications without prior notice for product improvement.

Tools needed:
1) Measuring tape
2) 1 1/8" wrench
3) 3/16" hex key
4) Hammer drill
5) 1" Masonry drill bit
6) Hammer
7) Drop-in concrete insert setting tool

PARTS LIST

ITEM	QTY	PART NUMBER	DESCRIPTION	MATERIAL	WEIGHT
1	1	R7551B	R7551 Base	Ductile Iron Powder Coated	63 lbs
2	1	R7551C	R7551 Cap	Ductile Iron Powder Coated	15 lbs
3	1	Drop-in Concrete Insert 3/4"	Drop-in Concrete Insert 3/4" - requires 1" x 3 1/8" hole (dia. x depth)	Steel Plated	1/2 lbs
4	1	R7500BAR 3/4"	R7500 Threaded Bar 3/4" Custom Order Length	Steel Plated	TBD
5	1	Washer 3/4" OD 3 1/2"	Washer 3/4" OD 3 1/2" Thick 1/4"	Steel Plated	5/8 lbs
6	1	Hex Nut 3/4"	Hex Nut 3/4" - requires 1 1/8" wrench	Steel Plated	1/8 lbs
7	3	Hexagon Socket Set Screw 3/8" x 3/4"	Hexagon Socket Set Screw 3/8" x 3/4" - requires 3/16" hex key	Stainless Steel	
8	3	Polyethylene Plug 3/8"	Polyethylene Plug 3/8"	LDPE Black	

RELIANCE FOUNDRY
SINCE 1925
Unit 207, 6450 - 148 Street, Surrey, BC V3S 7G7, Canada
1-877-789-3245 info@reliance-foundry.com
www.reliance-foundry.com

TITLE
Bollard R-7551

SIZE	DWG NO	REV
C	R7551	C4

NOT TO SCALE | SHEET 9 OF 12

COPYRIGHT RESERVED THIS PLAN DRAWING AND DESIGN ARE, AND AT ALL TIMES REMAIN, THE EXCLUSIVE PROPERTY OF RELIANCE FOUNDRY CO. LTD.

Bollard R-7551

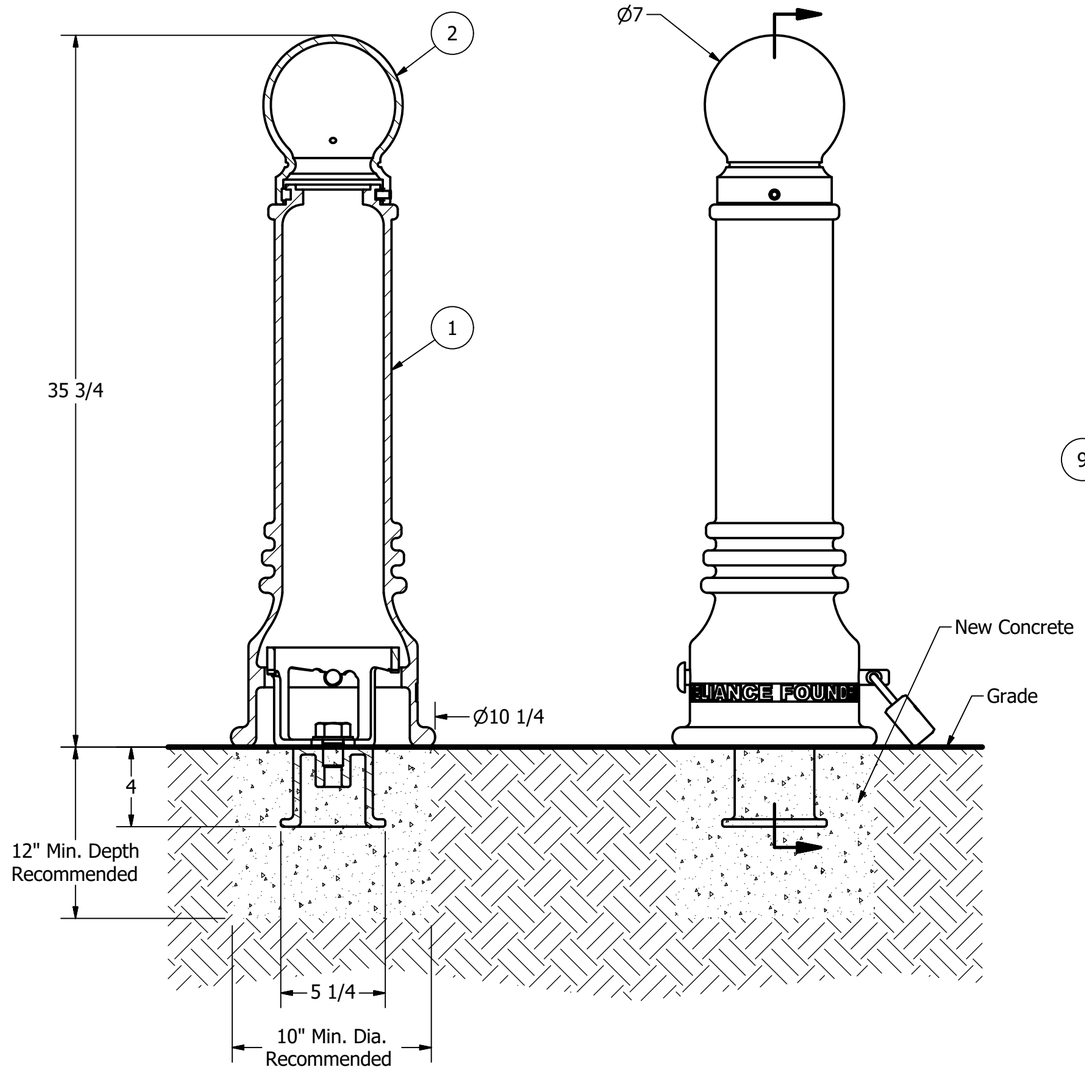

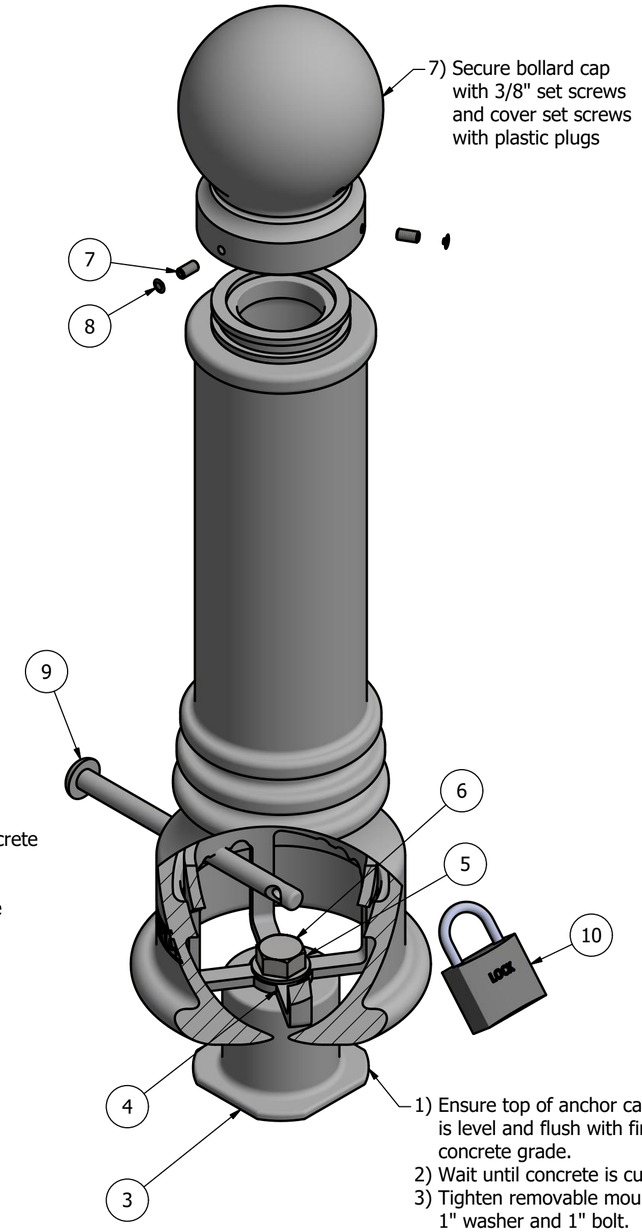

1) Ensure top of anchor casting is level and flush with finished concrete grade.
2) Wait until concrete is cured.
3) Tighten removable mount with 1" washer and 1" bolt.
4) Align and insert lock pin through bollard base.
5) Turn bollard base clockwise to tighten it into position.
6) Fasten the padlock.

Tools needed:
1) Measuring tape
2) 1 1/2" wrench
3) 3/16" hex key

Notes:
1) Bollard post is provided as shown. Concrete, foundation and/or installation ordered separately or provided by others.
2) Minimum foundation sizes depend on local soil conditions, weather conditions, and engineering requirements.
3) Dimensions provided herein is for reference only. Please consult Reliance Foundry sales professionals if any dimension is critical to your particular installation.
4) Reliance Foundry reserves the right to amend design and specifications without prior notice for product improvement.

General Description:

The R-7551 Decorative Bollard is made from a versatile ductile iron, featuring a clean finish and spherical top casting. Bollard surfaces are protected by a durable powder coating, available in 6 standard colors, to prevent wear and corrosion. Use as fixed, stand-alone bollards or cover impact-resistant security posts. Removable mountings are available.

Specifications:

Height: 35 3/4"
Base Diameter: 10 1/4"
Weight: 78 lbs (Bollard Only)
Material: Ductile Iron
Max. Interior Security Post Size:
4 1/2" x 25" (Diameter x Height)

Finish Options:

⦿ Polyester Powdercoated

See Reliance Foundry's standard color options at:
www.reliance-foundry.com/bollard/colors-bollards

Installation Options:

○ Fixed - Anchor Casting in New Concrete (see sheet 2 of 12)
○ Fixed - Concrete Insert Anchor in Existing Concrete (see sheet 3 of 12)
○ Fixed - Adhesive Anchor in Existing Concrete (see sheet 4 of 12)
○ Fixed - Anchor Casting with Concrete Form (see sheet 5 of 12)
○ Post Cover - New Post in New Concrete (see sheet 6 of 12)
○ Post Cover - New Post in Existing Concrete (see sheet 7 of 12)
○ Post Cover - Existing Post with Adhesive Anchor (see sheet 8 of 12)
○ Post Cover - Existing Post with Concrete Anchor (see sheet 9 of 12)
⦿ Removable - Anchor Casting in New Concrete (see sheet 10 of 12)
○ Removable - Concrete Insert Anchor in Existing Concrete (see sheet 11 of 12)
○ Removable - Premium Retractable in New Concrete (see sheet 12 of 12)

For more information on bollard post installation, please visit:
www.reliance-foundry.com/bollard/installation-bollards

Care and Maintenance:

Reliance's line of bollards are finished with a long-lasting powder-coating. Proper care and maintenance are required. Regularly-performed inspections and routine cleaning will ensure that a bollard retains its aesthetic appeal and does not become damaged by the elements.

See Reliance Foundry's maintenance guide at:
www.reliance-foundry.com/bollard/maintenance-bollards

PARTS LIST

ITEM	QTY	PART NUMBER	DESCRIPTION	MATERIAL	WEIGHT
1	1	R7551B	R7551 Base	Ductile Iron Powder Coated	63 lbs
2	1	R7551C	R7551 Cap	Ductile Iron Powder Coated	15 lbs
3	1	R7500AN 1"	R7500 Anchor Casting 1"	Ductile Iron Hot Dip Galvanized	8 3/8 lbs
4	1	R7500RM 1"	R7500 Removable Mount 1"	Steel Hot Dip Galvanized	4 5/8 lbs
5	1	Washer 1" OD 2"	Washer 1" OD 2" Thick 1/8"	Steel Plated	1/8 lbs
6	1	Hex Bolt 1" x 1 1/2"	Hex Bolt 1" x 1 1/2" - requires 1 1/2" wrench	Steel Plated	5/8 lbs
7	3	Hexagon Socket Set Screw 3/8" x 3/4"	Hexagon Socket Set Screw 3/8" x 3/4" - requires 3/16" hex key	Stainless Steel	
8	3	Polyethylene Plug 3/8"	Polyethylene Plug 3/8"	LDPE Black	
9	1	R7500 Lock Pin 3/4" x 10"	R7500 Lock Pin 3/4" x 10"	Steel Powder Coated	1 1/2 lbs
10	1	Padlock (Optional)	Optional Padlock (Brass or Stainless Steel)	Choice of Brass or Stainless Steel	5/8 lbs

RELIANCE FOUNDRY
SINCE 1925
Unit 207, 6450 - 148 Street, Surrey, BC V3S 7G7, Canada
1-877-789-3245 info@reliance-foundry.com
www.reliance-foundry.com

TITLE
Bollard R-7551

SIZE	DWG NO	REV
C	R7551	C4

NOT TO SCALE | SHEET 10 OF 12

COPYRIGHT RESERVED THIS PLAN DRAWING AND DESIGN ARE, AND AT ALL TIMES REMAIN, THE EXCLUSIVE PROPERTY OF RELIANCE FOUNDRY CO. LTD.

Bollard R-7551

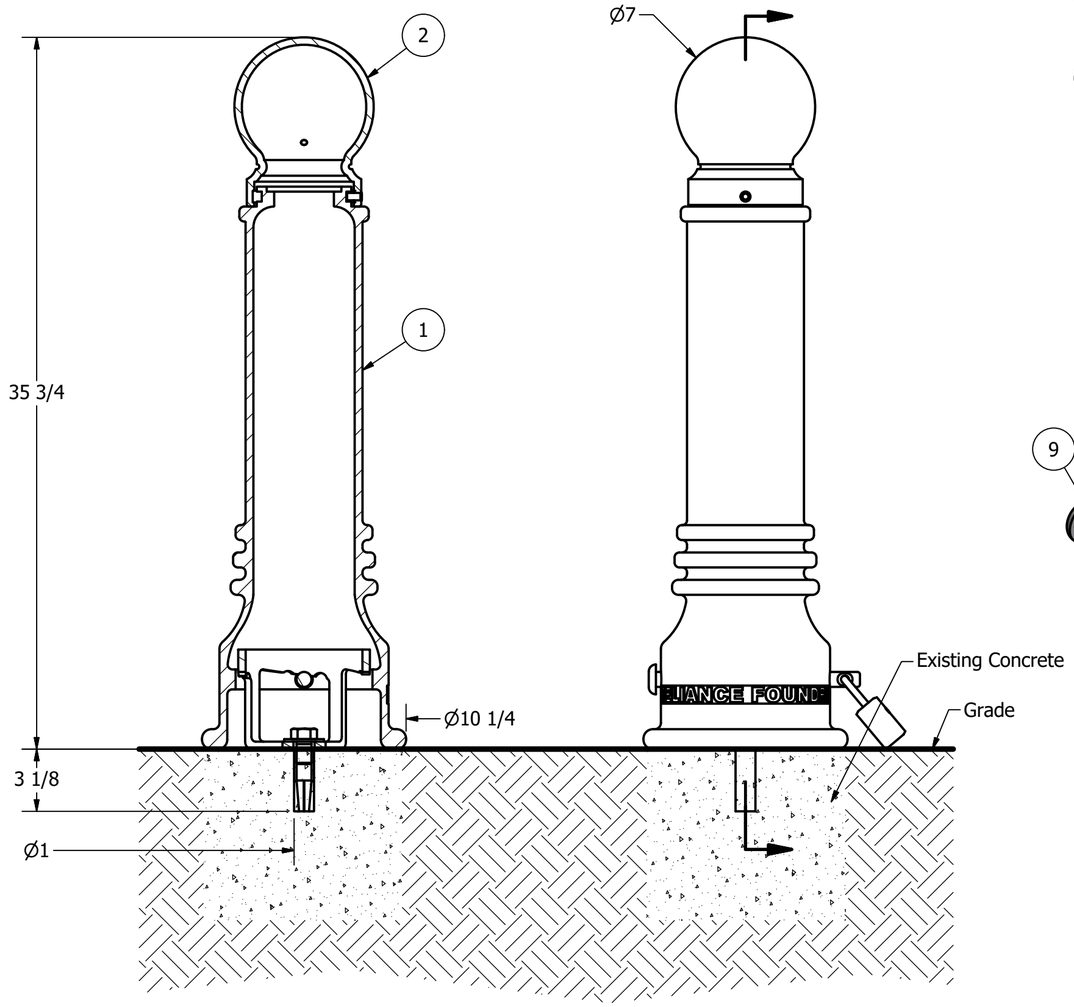

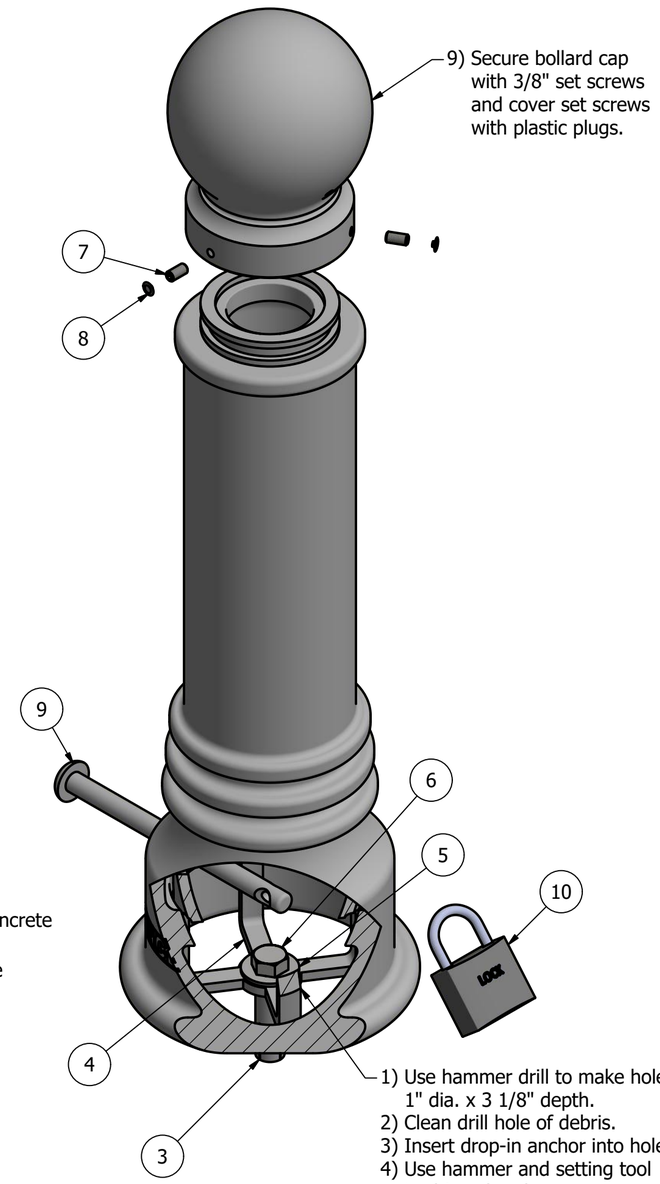

1) Use hammer drill to make hole 1" dia. x 3 1/8" depth.
2) Clean drill hole of debris.
3) Insert drop-in anchor into hole
4) Use hammer and setting tool to drive plug down.
5) Tighten removable mount with 3/4" washer and 3/4" bolt.
6) Align and insert lock pin through bollard base.
7) Turn bollard base clockwise to tighten it into position.
8) Fasten the padlock.

Tools needed:
1) Measuring tape
2) 1 1/8" wrench
3) 3/16" hex key
4) Hammer drill
5) 1" Masonry drill bit
6) Hammer
7) Drop-in concrete insert setting tool

Notes:
1) Bollard post is provided as shown. Concrete, foundation and/or installation ordered separately or provided by others.
2) Minimum foundation sizes depend on local soil conditions, weather conditions, and engineering requirements.
3) Dimensions provided herein is for reference only. Please consult Reliance Foundry sales professionals if any dimension is critical to your particular installation.
4) Reliance Foundry reserves the right to amend design and specifications without prior notice for product improvement.

General Description:

The R-7551 Decorative Bollard is made from a versatile ductile iron, featuring a clean finish and spherical top casting. Bollard surfaces are protected by a durable powder coating, available in 6 standard colors, to prevent wear and corrosion. Use as fixed, stand-alone bollards or cover impact-resistant security posts. Removable mountings are available.

Specifications:

Height: 35 3/4"
Base Diameter: 10 1/4"
Weight: 78 lbs (Bollard Only)
Material: Ductile Iron
Max. Interior Security Post Size:
4 1/2" x 25" (Diameter x Height)

Finish Options:

⦿ Polyester Powdercoated

See Reliance Foundry's standard color options at:
www.reliance-foundry.com/bollard/colors-bollards

Installation Options:

○ Fixed - Anchor Casting in New Concrete (see sheet 2 of 12)
○ Fixed - Concrete Insert Anchor in Existing Concrete (see sheet 3 of 12)
○ Fixed - Adhesive Anchor in Existing Concrete (see sheet 4 of 12)
○ Fixed - Anchor Casting with Concrete Form (see sheet 5 of 12)
○ Post Cover - New Post in New Concrete (see sheet 6 of 12)
○ Post Cover - New Post in Existing Concrete (see sheet 7 of 12)
○ Post Cover - Existing Post with Adhesive Anchor (see sheet 8 of 12)
○ Post Cover - Existing Post with Concrete Anchor (see sheet 9 of 12)
○ Removable - Anchor Casting in New Concrete (see sheet 10 of 12)
⦿ Removable - Concrete Insert Anchor in Existing Concrete (see sheet 11 of 12)
○ Removable - Premium Retractable in New Concrete (see sheet 12 of 12)

For more information on bollard post installation, please visit:
www.reliance-foundry.com/bollard/installation-bollards

Care and Maintenance:

Reliance's line of bollards are finished with a long-lasting powder-coating. Proper care and maintenance are required. Regularly-performed inspections and routine cleaning will ensure that a bollard retains its aesthetic appeal and does not become damaged by the elements.

See Reliance Foundry's maintenance guide at:
www.reliance-foundry.com/bollard/maintenance-bollards

PARTS LIST

ITEM	QTY	PART NUMBER	DESCRIPTION	MATERIAL	WEIGHT
1	1	R7551B	R7551 Base	Ductile Iron Powder Coated	63 lbs
2	1	R7551C	R7551 Cap	Ductile Iron Powder Coated	15 lbs
3	1	Drop-in Concrete Insert 3/4"	Drop-in Concrete Insert 3/4" - requires 1" x 3 1/8" hole (dia. x depth)	Steel Plated	1/2 lbs
4	1	R7500RM 1"	R7500 Removable Mount 1"	Steel Hot Dip Galvanized	4 5/8 lbs
5	1	Washer 3/4" OD 2"	Washer 3/4" OD 2" Thick 1/8"	Steel Plated	1/8 lbs
6	1	Hex Bolt 3/4" x 1 1/4"	Hex Bolt 3/4" x 1 1/4" - requires 1 1/8" wrench	Steel Plated	1/4 lbs
7	3	Hexagon Socket Set Screw 3/8" x 3/4"	Hexagon Socket Set Screw 3/8" x 3/4" - requires 3/16" hex key	Stainless Steel	
8	3	Polyethylene Plug 3/8"	Polyethylene Plug 3/8"	LDPE Black	
9	1	R7500 Lock Pin 3/4" x 10"	R7500 Lock Pin 3/4" x 10"	Steel Powder Coated	1 1/2 lbs
10	1	Padlock (Optional)	Optional Padlock (Brass or Stainless Steel)	Choice of Brass or Stainless Steel	5/8 lbs

RELIANCE FOUNDRY
SINCE 1925
Unit 207, 6450 - 148 Street, Surrey, BC V3S 7G7, Canada
1-877-789-3245 info@reliance-foundry.com
www.reliance-foundry.com

TITLE
Bollard R-7551

SIZE		DWG NO	REV
C		R7551	C4

NOT TO SCALE | SHEET 11 OF 12

COPYRIGHT RESERVED THIS PLAN DRAWING AND DESIGN ARE, AND AT ALL TIMES REMAIN, THE EXCLUSIVE PROPERTY OF RELIANCE FOUNDRY CO. LTD.

Bollard R-7551

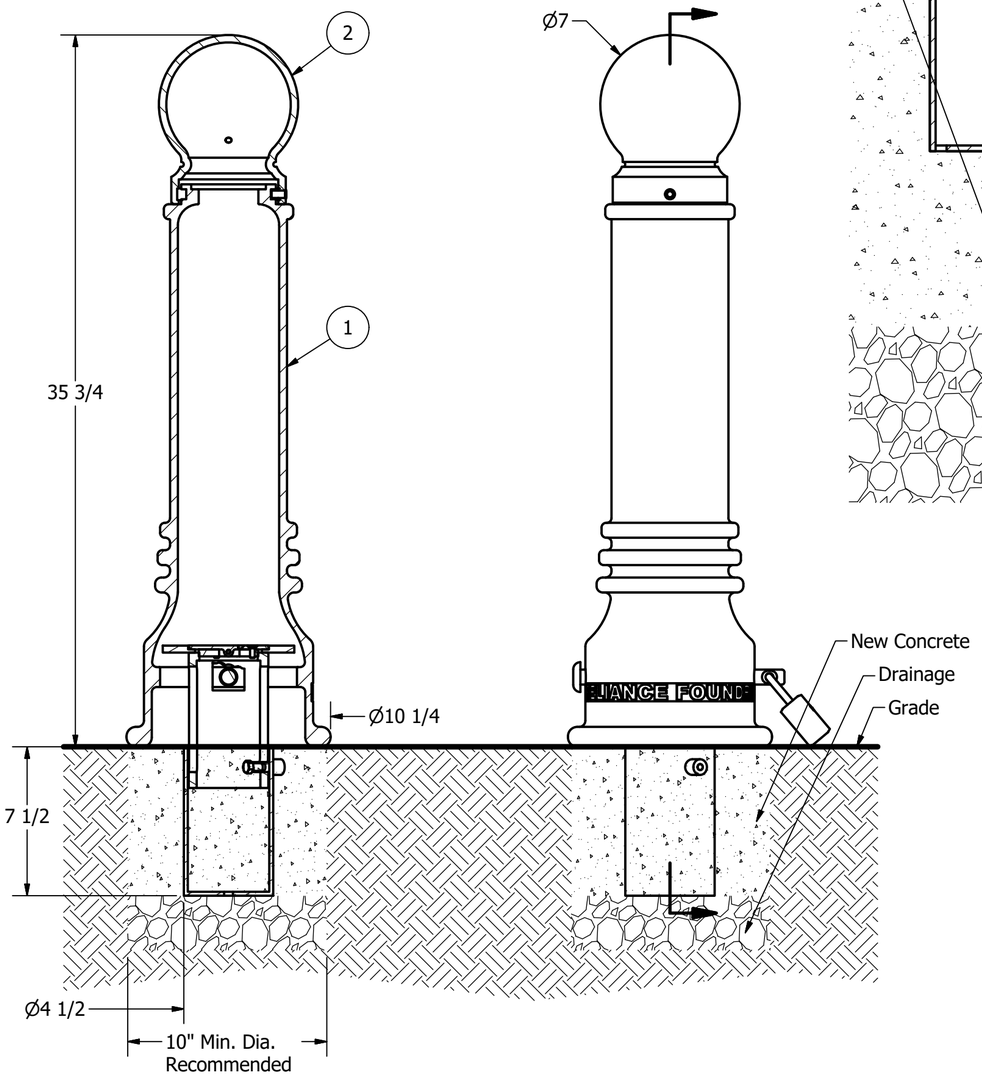

* If local frost line exceeds 7-1/2" deep, provide adequate drainage by piping through concrete, connect to drain rock layer underneath.

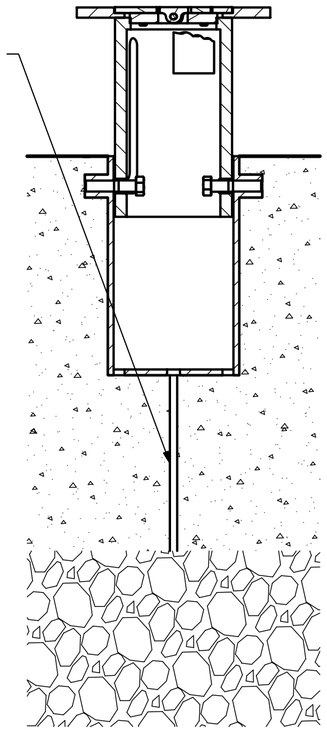

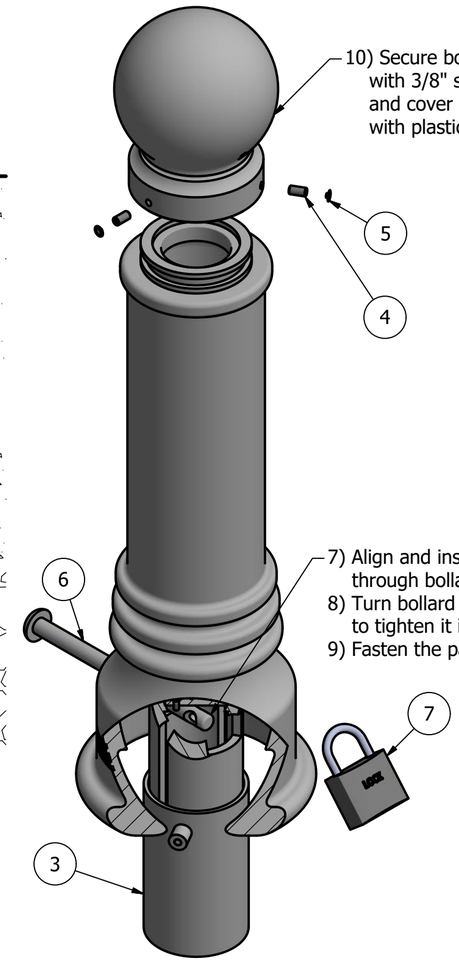

10) Secure bollard cap with 3/8" set screws and cover set screws with plastic plugs.

7) Align and insert lock pin through bollard base.
8) Turn bollard base clockwise to tighten it into position.
9) Fasten the padlock.

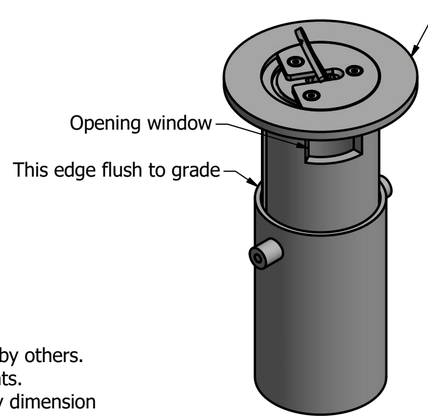

1) Ensure adequate drainage underneath
2) Ensure top edge of outer housing flush to grade
3) Lift handle raise inner housing, turn and rest on UP position
4) Observe and orient opening window to desired Lock Pin direction
5) Rest inner housing on DOWN position
6) Pour concrete and wait for concrete to cure

Tools needed:
1) Measuring tape
2) 3/16" hex key

General Description:

The R-7551 Decorative Bollard is made from a versatile ductile iron, featuring a clean finish and spherical top casting. Bollard surfaces are protected by a durable powder coating, available in 6 standard colors, to prevent wear and corrosion. Use as fixed, stand-alone bollards or cover impact-resistant security posts. Removable mountings are available.

Specifications:

Height: 35 3/4"
Base Diameter: 10 1/4"
Weight: 78 lbs (Bollard Only)
Material: Ductile Iron
Max. Interior Security Post Size:
4 1/2" x 25" (Diameter x Height)

Finish Options:

⦿ Polyester Powdercoated

See Reliance Foundry's standard color options at:
www.reliance-foundry.com/bollard/colors-bollards

Installation Options:

○ Fixed - Anchor Casting in New Concrete (see sheet 2 of 12)
○ Fixed - Concrete Insert Anchor in Existing Concrete (see sheet 3 of 12)
○ Fixed - Adhesive Anchor in Existing Concrete (see sheet 4 of 12)
○ Fixed - Anchor Casting with Concrete Form (see sheet 5 of 12)
○ Post Cover - New Post in New Concrete (see sheet 6 of 12)
○ Post Cover - New Post in Existing Concrete (see sheet 7 of 12)
○ Post Cover - Existing Post with Adhesive Anchor (see sheet 8 of 12)
○ Post Cover - Existing Post with Concrete Anchor (see sheet 9 of 12)
○ Removable - Anchor Casting in New Concrete (see sheet 10 of 12)
○ Removable - Concrete Insert Anchor in Existing Concrete (see sheet 11 of 12)
⦿ Removable - Premium Retractable in New Concrete (see sheet 12 of 12)

For more information on bollard post installation, please visit:
www.reliance-foundry.com/bollard/installation-bollards

Care and Maintenance:

Reliance's line of bollards are finished with a long-lasting powder-coating. Proper care and maintenance are required. Regularly-performed inspections and routine cleaning will ensure that a bollard retains its aesthetic appeal and does not become damaged by the elements.

See Reliance Foundry's maintenance guide at:
www.reliance-foundry.com/bollard/maintenance-bollards

Notes:
1) Bollard post is provided as shown. Concrete, foundation and/or installation ordered separately or provided by others.
2) Minimum foundation sizes depend on local soil conditions, weather conditions, and engineering requirements.
3) Dimensions provided herein is for reference only. Please consult Reliance Foundry sales professionals if any dimension is critical to your particular installation.
4) Reliance Foundry reserves the right to amend design and specifications without prior notice for product improvement.

PARTS LIST

ITEM	QTY	PART NUMBER	DESCRIPTION	MATERIAL	WEIGHT
1	1	R7551B	R7551 Base	Ductile Iron Powder Coated	63 lbs
2	1	R7551C	R7551 Cap	Ductile Iron Powder Coated	15 lbs
3	1	R7000	R7000 Retractable Removable Mount w/ Spacer L	Steel Hot Dip Galvanized	17 1/2 lbs
4	3	Hexagon Socket Set Screw 3/8" x 3/4"	Hexagon Socket Set Screw 3/8" x 3/4" - requires 3/16" hex key	Stainless Steel	
5	3	Polyethylene Plug 3/8"	Polyethylene Plug 3/8"	LDPE Black	
6	1	R7500 Lock Pin 3/4" x 10"	R7500 Lock Pin 3/4" x 10"	Steel Powder Coated	1 1/2 lbs
7	1	Padlock (Optional)	Optional Padlock (Brass or Stainless Steel)	Choice of Brass or Stainless Steel	5/8 lbs

RELIANCE FOUNDRY SINCE 1925
Unit 207, 6450 - 148 Street, Surrey, BC V3S 7G7, Canada
1-877-789-3245 info@reliance-foundry.com
www.reliance-foundry.com

TITLE
Bollard R-7551

SIZE	DWG NO	REV
C	R7551	C4

NOT TO SCALE | SHEET 12 OF 12

COPYRIGHT RESERVED THIS PLAN DRAWING AND DESIGN ARE, AND AT ALL TIMES REMAIN, THE EXCLUSIVE PROPERTY OF RELIANCE FOUNDRY CO. LTD.