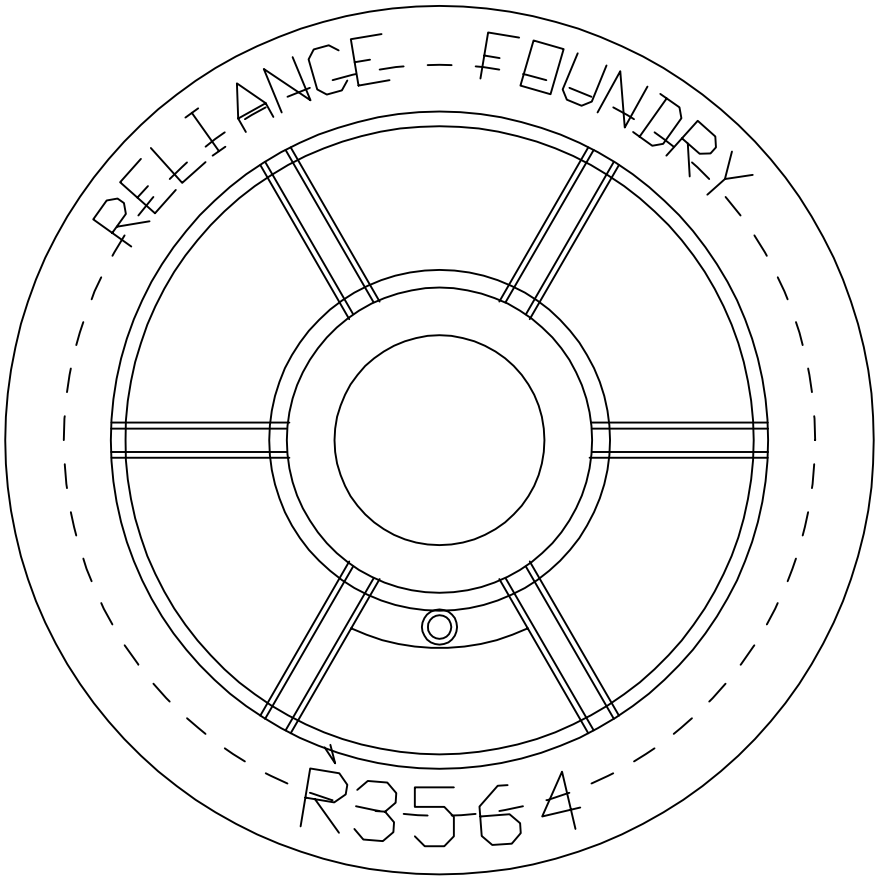

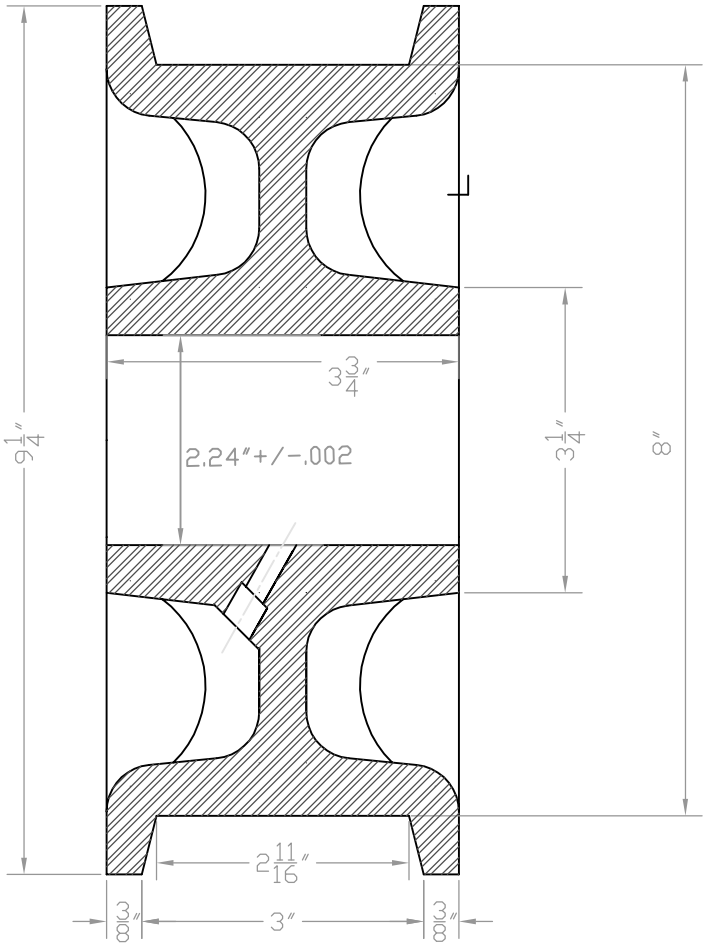

Material: CAST STEEL

RELIANCE FOUNDRY Co. Ltd.
#207 - 6450 148TH ST. SURREY BC V3S 7G7
1-888-735-5680 WWW.RELIANCE-FOUNDRY.COM

COPYRIGHT RESERVED
THIS PLAN AND DESIGN ARE, AND AT ALL TIMES, REMAIN THE EXCLUSIVE PROPERTY OF RELIANCE FOUNDRY CO. LTD. AND CANNOT BE USED OR REPRODUCED WITHOUT WRITTEN CONSENT.

FABRICATOR TO VERIFY ALL DIMENSIONS BEFORE PROCEEDING. DIMENSIONS ALWAYS TAKE PRECEDENCE OVER SCALE DIMENSIONS. ALL CONSTRUCTION SHALL COMPLY WITH THESE APPROVED DRAWINGS AND THE OWNER'S REPRESENTATIVE.

ISSUE NO.	D M Y DATE	DESCRIPTION	DR	CH	APP

RELIANCE FOUNDRY CO

DF WHEEL

FILE			
DATE JAN. 21/10	SCALE NTS	APPR. BY.	
DRAWN	DRAWING NUMBER R3564	SIZE	REV.
CHKD			
DESIGN			